ORDER NO. VKD86111018C8

Service Manual

Remote Control Unit
WV-RC35

RCU Adaptor
WV-AD37

Camera Remote Controller
WV-CR12

Pan/Tilt Head
WV-PH10

Mounting Bracket
WV-Q39

12× Studio Zoom Lens
WV-LZ15/12

10P-14P Conversion Cable
WV-CA11

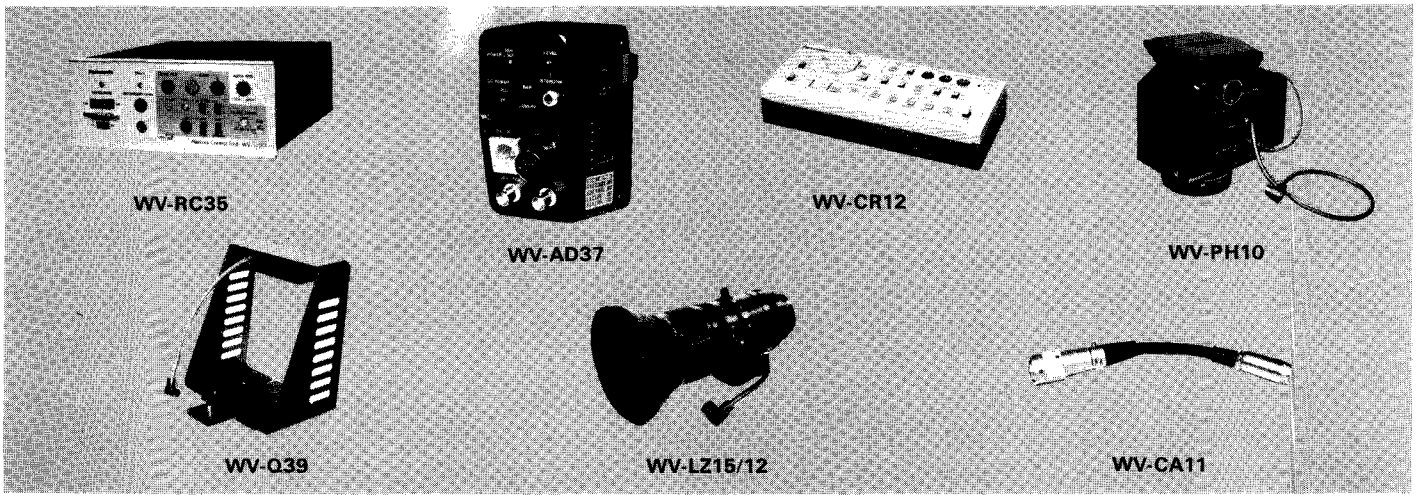

CONTENTS

SAFETY PRECAUTION 2
CIRCUIT DESCRIPTION
Remote Control Unit (RCU) WV-RC35 3
Camera Remote Controller WV-CR12 5
RCU Adaptor WV-AD37. 5
Pan/Tilt Head WV-PH10 7
ADJUSTMENT PROCEDURE
1. Test Equipment Required 8
2. Disassembling Procedure for Adjustment 8
Remote Control Unit (RCU) WV-RC35 8
RCU Adaptor WV-AD37. 8
Camera Remote Controller WV-CR12 8
Pan/Tilt Head WV-PH10 9
3. Disassembly Procedure 10
Pan/Tilt Head WV-PH10 10
Mounting Bracket WV-Q39 11
12X Automatic Iris Studio Zoom Lens WV-LZ15/12 11
4. Adjustment Procedure 12
Remote Control Unit (RCU) WV-RC35 12
RCU Adaptor WV-AD37. 12
Camera Remote Controller WV-CR12 15
Pan/Tilt Head WV-PH10 16
LOCATION OF TEST POINTS AND ADJUSTING CONTROLS. 16
CABLE INFORMATION 17
BLOCK DIAGRAM
Remote Control Unit (RCU) WV-RC35 18
RCU Adaptor WV-AD37. 19
Camera Remote Controller WV-CR12 20
SCHEMATIC DIAGRAM
Remote Control Unit (RCU) WV-RC35 21
RCU Adaptor WV-AD37. 24
Camera Remote Controller WV-CR12 25
Pan/Tilt Head WV-PH10 27
Mounting Bracket WV-Q39 27
CONDUCTOR VIEW
Remote Control Unit (RCU) WV-RC35 22
RCU Adaptor WV-AD37. 23
Camera Remote Controller WV-CR12 26
Pan/Tilt Head WV-PH10 27
Mounting Bracket WV-Q39 27
WIRING DIAGRAM
12X Automatic Iris Studio Zoom Lens WV-LZ15/12 . . 28
REPLACEMENT PARTS LIST 29
EXPLODED VIEW 44

National/Panasonic

Matsushita Electric Trading Co., Ltd.

SAFETY PRECAUTION

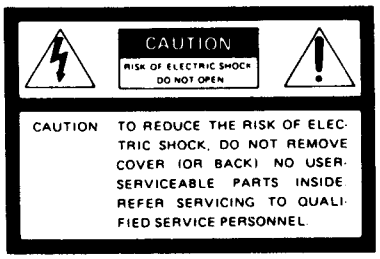

This symbol warns the user that uninsulated voltage within the unit may have sufficient magnitude to cause electric shock. Therefore, it is dangerous to make any kind of contact with any inside part of this unit.

This symbol alerts the user that important literature concerning the operation and maintenance of this unit has been included.
Therefore, it should be read carefully in order to avoid any problems.

IMPORTANT SAFETY NOTICE

There are special components used in this equipment which are important for safety. These parts are shaded on the schematic diagram and on the replacement parts list. It is essential that these critical parts should be replaced with manufacturer's specified parts to prevent shock, fire, or other hazards. Do not modify the original design without permission of manufacturer.

Circuit Description

WV-RC35

The remote control unit WV-RC35 has following circuits.

Power Board

- + 17V Regulator Circuit

Main Board

- + 5V Regulator Circuit
- Video Signal Output Circuit
- Lineview Video Output Circuit
- V.Sync Separation Circuit
- Gen-Lock Output Circuit
- Microprocessor Circuit
- Intercom Amplifier Circuit

Power Board

- **+ 17V Regulator Circuit**

This circuit is composed of IC1, Q2 and Q3 on the power board and a power transistor Q1.
Approx. 22V AC obtained at secondary winding is rectified by D1 and approx. + 30V DC is generated.
The + 30V DC is switched by the power transistor Q1 and D2. As a result, regulated + 17V DC is generated and it is fed to the AC/DC selection switch.
The switching frequency is approx. 100KHz which is set by C4 and R6 EXT DC voltage (12V ~ 20V) is supplied to CN2 (EXT DC INPUT).

Main Board

- **+ 5V Regulator Circuit**

This circuit is composed of Q46 and Q47 and + 5V DC is generated from the regulated + 9V DC.

- **Video Signal Output Circuit**

This circuit is composed of Q1 ~ Q13 and a VBS signal from the camera head through the RCU adaptor WV-AD37 is amplified to compensate the cable loss and fed to the video output connectors.

- **Lineview Video Output Circuit**

This circuit is composed of Q20 ~ Q28 and a lineview video signal (VBS) fed to the AUX INPUT connectors is amplified to compensate the cable loss and fed to the camera head through a studio cable and RCU adaptor.

- **V.Sync Separation Circuit**

This circuit is composed of Q15 ~ Q19 and the V.sync signal of the video (VBS) signal from the camera head is separated and fed to the microprocessor circuit as a reference signal for the serial data transmission.
The composite sync signal of the VBS is detected by Q14 and amplified by Q15. The V.sync signal is detected from the composite sync signal by an integrator R54 and C19.
A waveform shaper Q16 and Q17 makes V.sync signal sharp.
The negative polarity V.sync signal is fed to the base of Q41.

- **Gen-Lock Output Circuit**

This circuit is composed of Q29 ~ Q34 and the gen-lock signal (black burst or composite video (VBS) signal) is phase-shifted by Q29 and VR6 (SC PHASE FINE) on the Control board and amplified by Q31 ~ Q34.
The gen-lock signal is then sent to the camera head through RCU adaptor.

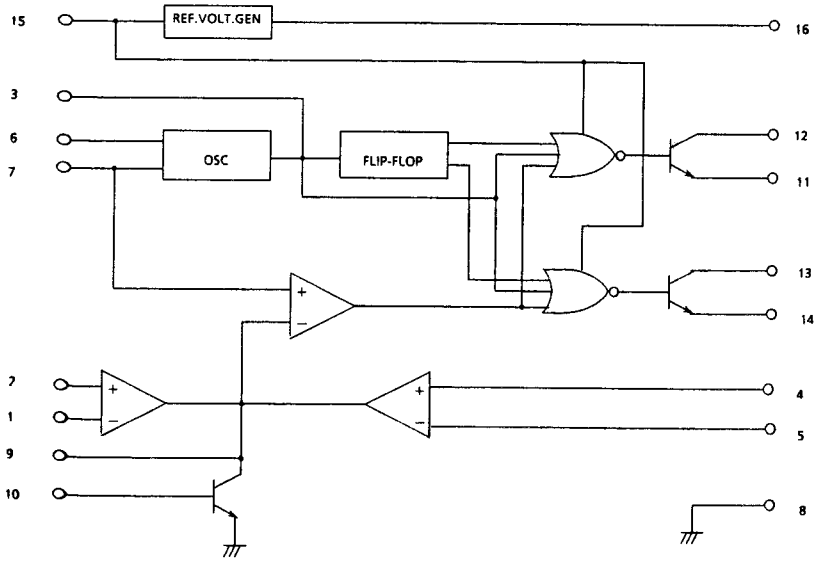

Fig. 1 Block Diagram of IC1

- **Microprocessor Circuit**

This circuit is composed of IC1 ~ IC3, IC6, Q40 ~ Q43.
This circuit sends the 8 times of 8 bit data to the camera head as a serial data at the rate of 8 bits per 1Vs period.
The block diagram is shown below.

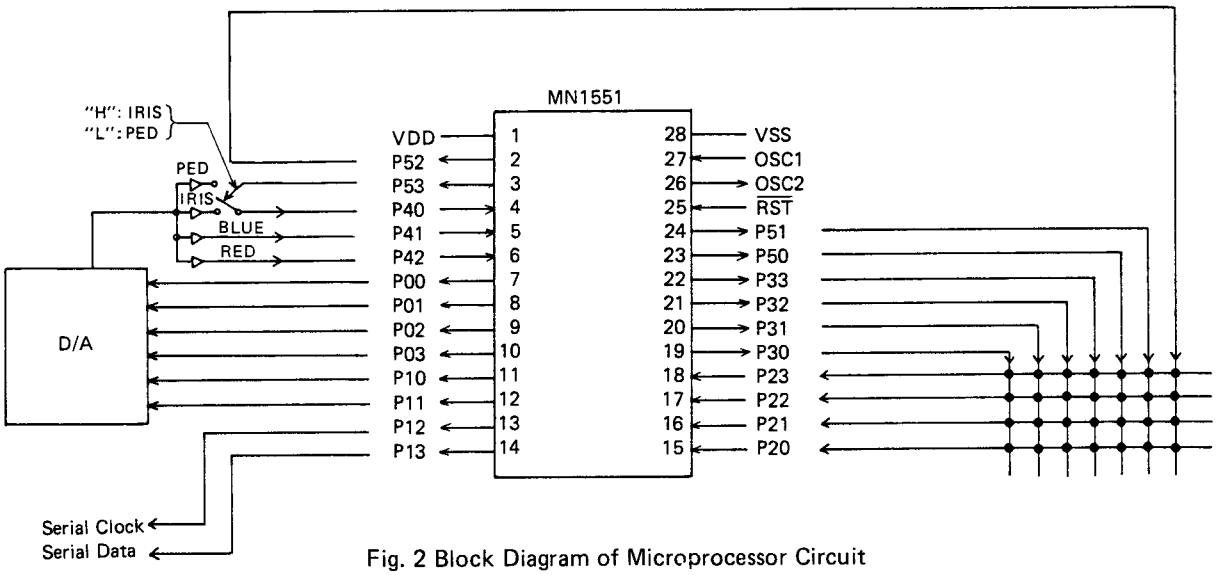

Fig. 2 Block Diagram of Microprocessor Circuit

The pin identification of IC1 (MN1551CVT3S)

Pin No.	Name	In/Out	Description
1	V_{DD}	IN	Power
2	P52	OUT	Key scan out
3	P53	OUT	Iris (H)/Pedestal (L)
4	P40	IN	Iris or Pedestal (H – up)
5	P41	IN	Blue Gain (H – up)
6	P42	IN	Red Gain (H – up)
7	P00	OUT	Iris R.B Gain DA0 (LSB)
8	P01	OUT	Iris R.B Gain DA1
9	P02	OUT	Iris R.B Gain DA2
10	P03	OUT	Iris R.B Gain DA3
11	P10	OUT	Iris R.B Gain DA4
12	P11	OUT	Iris R.B Gain DA5 (MSB)
13	P12	OUT	Serial Clock
14	P13	OUT	Serial Data
15	P20	IN	Key scan in
16	P21	IN	Key scan in
17	P22	IN	Key scan in
18	P23	IN	Key scan in
19	P30	OUT	Key scan out
20	P31	OUT	Key scan out
21	P32	OUT	Key scan out
22	P33	OUT	Key scan out
23	P50	OUT	Key scan out
24	P51	OUT	Key scan out
25	$\overline{RST}$	IN	Reset pulse
26	OSC2	OUT	Clock oscillator
27	OSC1	IN	Clock oscillator
28	Vss	IN	Ground

OUT \ IN	P23	P22	P21	P20
P30	AWC SET	FADE	REC · REV	NEGA · POSI SLOW
P31	COLOR BAR /CAMERA ON=BAR OFF=CAMERA	STANDBY /ON ON=STANDBY OFF=ON	AWC/ATW ON=ATW OFF=AWC	REC/PLAY ON=PLAY OFF=REC
P32	REC START/STOP	DATE·TIME ON/OFF (SHIFT) REV	TITLE ON/OFF (SEQ) CUE	(SET START/STOP) PLAY/STILL
P33	FOCUS SPEED ON=FAST OFF=SLOW	SW LOCK ON=LOCK OFF=FREE	TIME LAPS ON/OFF	TALLY LIGHT OFF=ON AIR
P50	FOCUS AUTO/MANU ON=AUTO OFF=MANU	AF ONE SHOT AREA SIZE	PAN·TILT /FOCUS·ZOOM ON=PAN·TILT OFF=FOCUS·ZOOM	PLAY BACK ON=PLAY BACK
P51	PAN RIGHT ZOOM WIDE	PAN LEFT ZOOM TELE	TILT DOWN FOCUS FAR	TILT UP FOCUS NEAR
P52	ZOOM SPEED ON=FAST OFF=SLOW	TIME LAPS MODE SW ON=LAPS	Vsync ON(L) OFF(H)	VTR (CR12) /(CAMERA) ON=(CR1 2) OFF=(CAMERA)

Fig. 3 Input Matrix Circuit

- **Intercom Amplifier Circuit**

This circuit is composed of IC4, IC5, Q36 ~ Q39.
'IC4 is the amplifier for the speaker of the head set connected to the RCU adaptor WV-AD37.
IC5 is the amplifier for the talk signal which is fed to SEG (Special Effect Generator).

WV-CR12

The camera remote controller WV-CR12 has following circuits.

- Video Output Circuit
- AF Area and EVF Character Signal Circuit
- Zebra and Vp Signal Circuit
- Microprocessor Circuit

- **Video Output Circuit**

This circuit is composed of Q4 ~ Q25 and Q66 and receives composite video signal (VBS) of camera head or playback video signal from the VTR and feeds it to the VTR connector and monitor output connector together with level indicator (zebra) and character signals.
The VBS signal from pin 1 of CN9 is amplified by Q4 ~ Q13, Q15, Q17, Q18 to compensate the cable loss.
The gain (Q11 ~ Q13) and frequency response (Q5, Q7 ~ Q10) is selected by SW1 (CABLE LENGTH COMPENSATION SWITCH).
Q20 detects the playback DC voltage multiplexed on the playback video signal from the VTR and cuts off Q15, Q17, Q18 and playback video signal from pin 1 of CN9 is amplified by Q21 ~ Q25 and supplied to the monitor output.
The zebra and character signals are mixed to the video signal at the emitter of Q22.

- **AF Area and EVF Character Signal Circuit**

This circuit is composed of Q26 ~ Q35, Q45 ~ Q50 and receives AF area and character signals from the camera head and feeds them to the video output circuit to mix them with the composite video signal for monitor output.
The AF area and character signal from pin 6 of CN9 is amplified by Q26 ~ Q35 as well as the composite video signal.
The waveform at TP4 (AREA) is shown below.

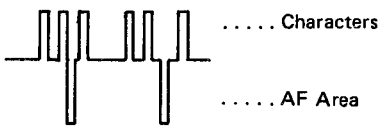

Q47 and Q48 pass the character signal and Q49 and Q50 pass the AF area signal.
The AF area signal is then switched ON/OFF by the SW22 (AF ZONE ON/OFF SWITCH).

- Zebra and Vp Signal Circuit

This circuit is composed of Q36~Q44 & Q65 and receives the level indicator (zebra) & Vp (multiplexed) signal from the camera head and feeds the zebra signal to the video output circuit to mix it with the composite video signal for monitor output. This circuit also separates the Vp pulse and sends it to the microprocessor circuit as a reference signal of the serial data transmission.

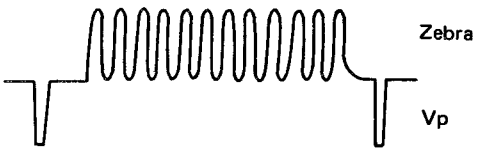

The zebra&Vp signal from pin 5 of CN9 is amplified by Q36 ~ Q43 as well as the video output and AF area & character circuits. The zebra signal is then fed to the emitter of Q22 from the emitter of Q43 through IC1(b) (REC/P.B) and IC1(a) (STANDBY/ON). Q44 and Q65 separate the Vp signal by canceling the zebra signal and feed it to the microprocessor circuit.

- Microprocessor Circuit

This circuit is composed of IC1(c), IC2~IC4,IC6,Q51~Q54 and Q57~Q64 and make the serial data communication with the camera head, VTR and 8X auto-focus lens.
Please refer to page 1-44 and 1-45 of WV-3260/8AF series (NTSC) or WVP-F10 series (PAL) service manual for the pin identification of IC6 and page 3 of this manual for that of IC2.

WV-AD37

The RCU adaptor WV-AD37 has following circuits.

- Internal/External Selection Circuit
- Lineview Video Output Circuit
- H.Phase Control Circuit
- SC Phase Control Circuit
- Camera/RCU Selection Circuit
- Serial Data Output Circuit
- Serial Clock Output Circuit
- Sync Separation Circuit
- Burst Gate Circuit
- Color bar Signal Generator Circuit

- Internal/External Selection Circuit

This circuit is composed of Q19 and receives INT (Internal sync.: Low) or EXT (Gen-lock : High) signal from the camera head through pin 6 of CN9. The output of Q19 turns ON or OFF of the gen-lock indicator D2 and Q4 which is used for reducing a noise of sync separation circuit when no gen-lock signal is supplied.

- Lineview Video Output Circuit

This circuit is composed of Q20 and receives the lineview video signal from RCU and removes the chroma component of lineview video signal by CF4 and sends it to camera head.

- H.Phase Control Circuit

This circuit is composed of IC3, IC4(d) and Q18 and supplies the DC voltage of H.phase control for gen-lock mode from VR1 (H.PHASE for using RCU adaptor only) or that of from RCU through Q18. IC3 selects the RCU use(RCU) or without RCU(EXT) mode. IC4(d) is a DC amplifier for the H.phase cotrol DC voltage.

- SC Phase Control Circuit

This circuit is composed of IC3, IC4(a),(b),(c) and supplies 2 bits control signal to the camera head.

IC4(a),(b) and (c) conform a window comparator and SC phase control DC voltage (analog signal) from SW1 & SW2 (SC PHASE COARSE-1 & 2) or from the RCU through IC3.

The 2 bits output signal obtained at pins 1 and 2 is fed to camera head through pins 1 & 4 of CN9.

- Camera/RCU Selection Circuit

This circuit is composed of Q134 and Q135 and receives RCU(High) or EXT(Low) selection signal from SW1 (POWER SELECTION SWITCH) and enables or disables the serial data output and serial clock output circuits.

- Serial Data Output Circuit

This circuit is composed of Q131~Q133 and amplifies/shapes the serial data signal.

- Serial Clock Output Circuit

This circuit is composed of Q113~Q115 and amplifies/shapes the serial clock signal as well as the serial data output circuit.

- Sync Separation Circuit

This circuit is composed of Q1~Q6 and generates composite sync signal by separating it from the gen-lock signal (black burst or composite video signal). The gen-lock sync signal obtained at the collector of Q6 is fed to the camera head through pin 8 of CN9.

- Burst Gate Circuit

This circuit is composed of Q7~Q9 and MAIN VIC BOARD and generates the gen-lock burst signal by separating it from the gen-lock signaland sends it to the camera head.

IC1 on the VIC board receives non-delayed burst signal from the emitter of Q10 to pin 8 of IC10 and amplifies it by the DC control voltage fed from the thermistor mounted on camera head through pin 9 of CN9 to pin 4 of IC1 on VIC board.

The amplified burst signal obtained at pin 12 of IC1 is mixed with 90° delayed burst signal at pin 2 of BPF CF3. By this mixing, the burst phase is compensated (maintained) from a temperature drift.

The burst signal obtained at pin 13 of IC2(a) is sent to the camera head through pin 11 of CN9.

- Color bar Signal Generator Circuit

This circuit is composed of IC101~IC103, IC105, IC106, Q101~Q112 & Q116~Q130 and generates composite color bar signal and send it to the camera head.

IC101(a) and (d) oscillate approx.130kHz pulse and feed it to pin 15 of IC102. IC102 generates following pulses.

Blue pulse —— Pin 6

Red pulse —— Pin 11

Green pulse — Pin14

The Y signal of color bar is generated at the base of Q104 , R-Y signal at pin 7 and B-Y signal at pin 1 of IC103 are generated respectively.

The R-Y and B-Y signals are then mixed with burst flag pulse (BFP) fed from the emitters of Q126 & Q128 and supplied to balanced modulator IC106 pins 5 & 14.

The modulated chroma & burst signal mixed at the base of Q108 is then forwarded to the output amplifier of color bar signal consisting of Q105~Q110.

Q116~Q122 conform the phase shifter for generating R-Y subcarrier & B-Y subcarrier signals.

In the PAL model, the R-Y subcarrier signal is inverted by lines by IC105 pins 3,4 & 5.

WV-PH10

The Pan/Tilt head WV-PH10 has following circuits.

- Panning Motor Drive Circuit
- Tilting Motor Drive Circuit

- Panning Motor Drive Circuit

This circuit is composed of IC1,IC3,Q1, & Q3 and detects the direction of panning (LEFT/RIGHT) and supplies the drive current to the panning motor.

The IC1 conformes a window comparator and the panning control signal fed from pin 3 of CN1 is as follows.

LEFT	Approx. 1~2 volts
RIGHT	Approx. 3~4 volts

LEFT	Pins 1 & 14 of IC1 —— High
	Pins 2 & 13 of IC1 — Low
	Drive current — Pin 7 of IC3 –Pin 1 of CN3 –
	PAN MOTOR – Pin 3 of CN3 – Pin 8 of IC3
RIGHT	Vise versa of left

Q1 and Q3 control the drive current thus the motor speed is controlled.

- Tilting Motor Drive Circuit

This circuit functions same mannar as the panning motor drive circuit.

ADJUSTMENT PROCEDURE

1. Test Equipment Required

The following test equipment is required for adjustment of Remote Control Unit (RCU) model WV-RC35, RCU Adaptor model WV-AD37, Camera Remote Controller model WV-CR12 and Pan/Tilt Head model WV-PH10.

- o Oscilloscope
  (dual trace, delayed sweep, 25MHz band width with three probes.)
- o Digital voltmeter (DVM)
- o Frequency counter
- o Vectorscope
- o Color video monitor
- o Tripod

2. Disassembly Procedure for Adjustment

2-1 Remote Control Unit WV-RC35

- o Remove four screws which hold the cover and remove the cover. (Fig. 2-1-1)

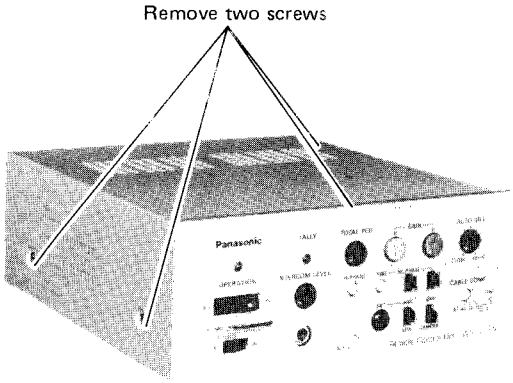

Fig. 2-1-1

2-2 RCU Adaptor WV-AD37

- o Remove four screws which hold the cover and remove the cover. (Fig. 2-2-1 and Fig. 2-2-2)

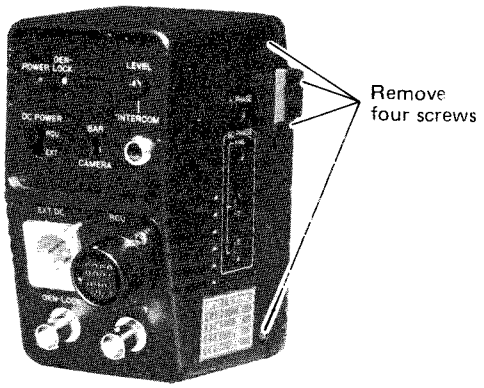

Fig. 2-2-1

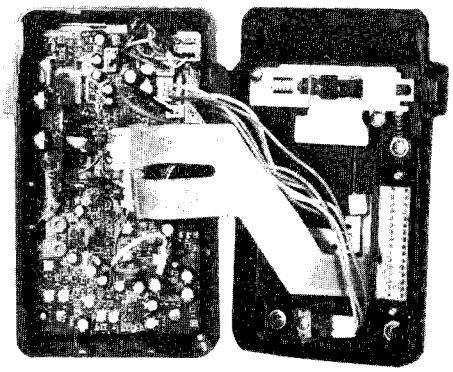

Fig. 2-2-2

2-3 Camera Remote Controller WV-CR12

- o Remove four screws which hold the cover and remove the cover. (Fig. 2-3-1 and Fig. 2-3-2)

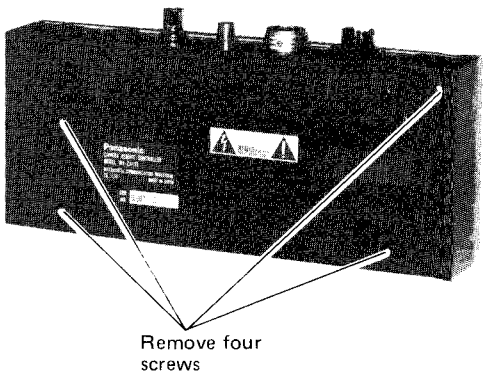

Fig. 2-3-1

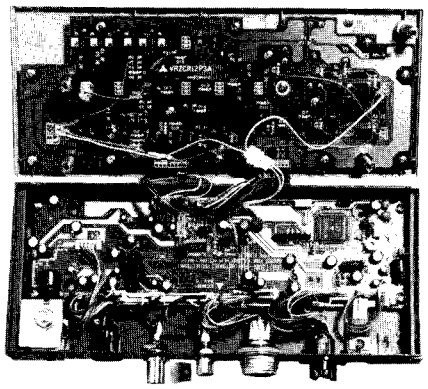

Fig. 2-3-2

2-4 Pan/Tilt Head WV-PH10

o Remove two screws which hold the decoration plate and remove the decoration plate. (Fig. 2-4-1)

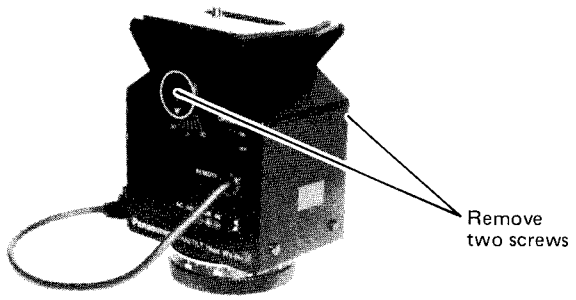

Fig. 2-4-1

o Remove six screws which hold the camera stand and remove the camera stand. (Fig. 2-4-2)

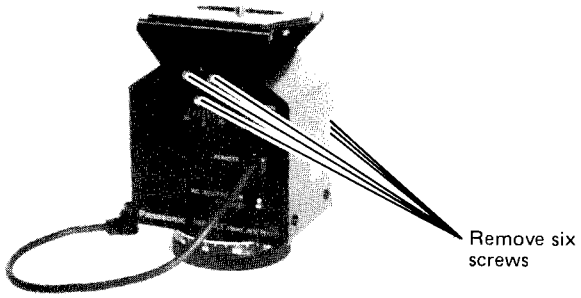

Fig. 2-4-2

o Remove ten screws which hold the cover and remove the cover. (Fig. 2-4-3)

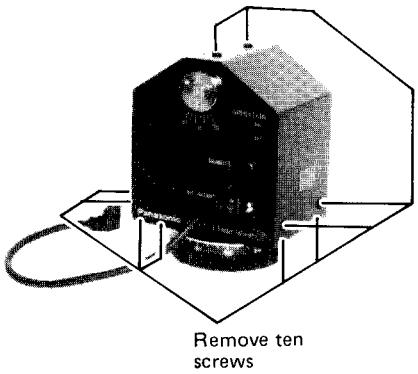

Fig. 2-4-3

o Remove the control board by removing four fixing screws. (Fig. 2-4-4 and Fig. 2-4-5)

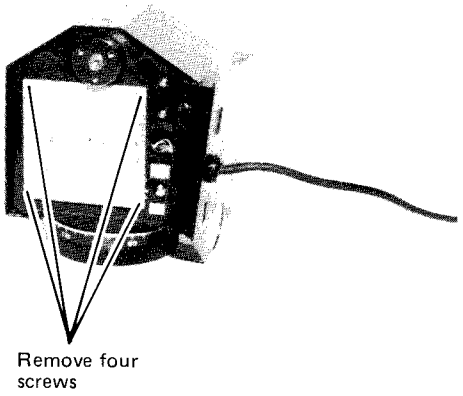

Fig. 2-4-4

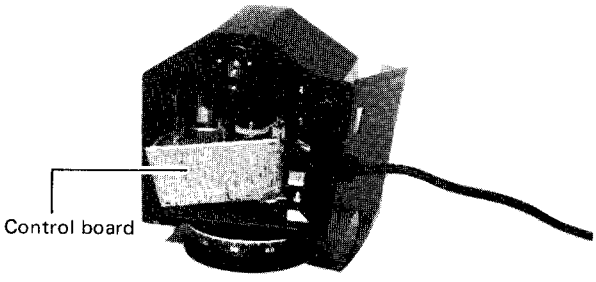

Fig. 2-4-5

3. Disassembly Procedure

3-1 Pan/Tilt Head WV-PH10

o See Fig. 2-4-1 on page 9.

o See Fig. 2-4-2 on page 9.

o See Fig. 2-4-3 on page 9.

o See Fig. 2-4-4 on page 9.

o Remove two screws fixing the flange and T cam using hexa wrench and remove two screws fixing the side plate and remove the flange and side plate. (Fig. 3-1-1 and Fig. 3-1-2)

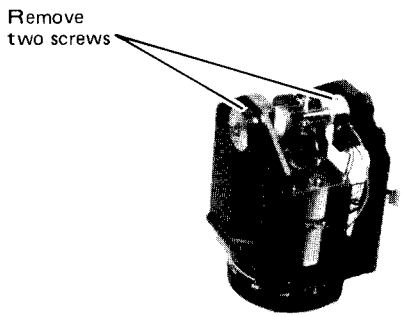

Fig. 3-1-1

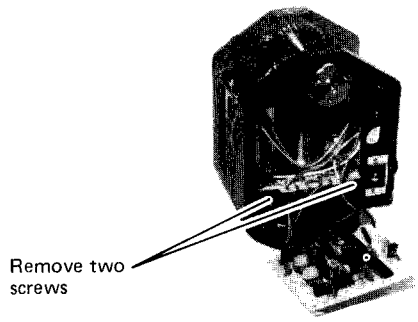

Fig. 3-1-2

o Remove the switch board by removing two fixing screws. (Fig. 3-1-3)

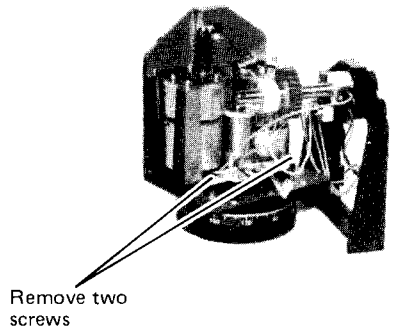

Fig. 3-1-3

o Remove the tilting motor unit by removing three fixing screws. (Fig. 3-1-4)

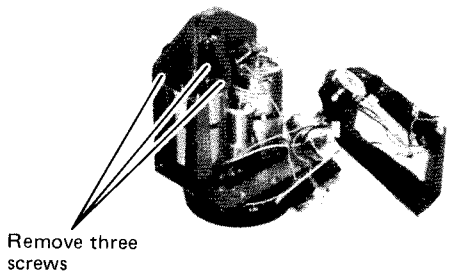

Fig. 3-1-4

o Remove the paning main shaft base assy by removing fixing screws. (Fig. 3-1-5)

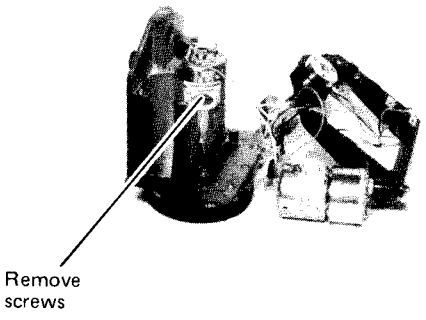

Fig. 3-1-5

o Remove the paning motor unit by removing three fixing screws. (Fig. 3-1-6)

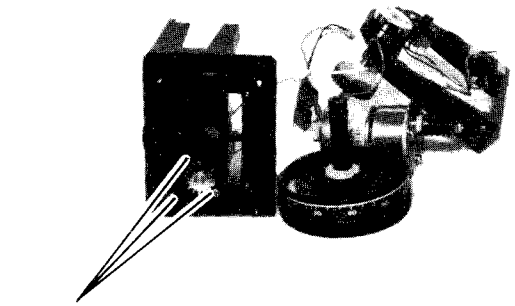

Fig. 3-1-6

3-2 Mounting Bracket WV-Q39

o Remove four screws which hold the cover and remove the cover. (Fig. 3-2-1)

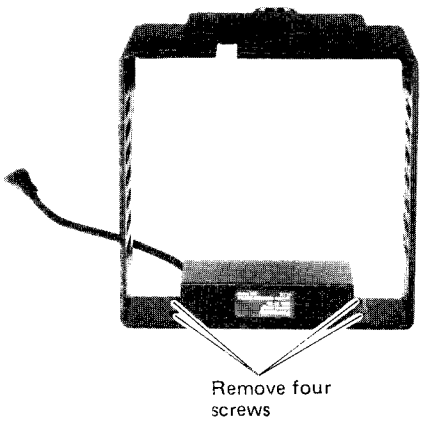

Fig. 3-2-1

o Removetwoscrews which hold the buffer board and remove the buffer board.(Fif. 3-2-2)

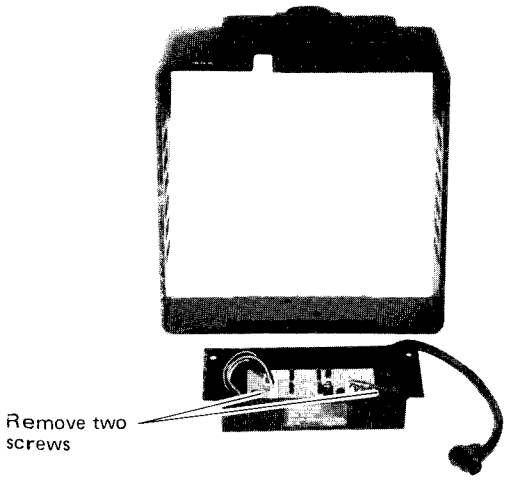

Fig. 3-2-2

3-3 12X Automatic Iris Studio Zoom Lens WV-LZ15/12

o Disconnect the lens connector from the camera.
o Remove the lens hood by turning it counterclockwise.
o Remove four screws which hold the Iris Cover. (Fig. 3-3-1)

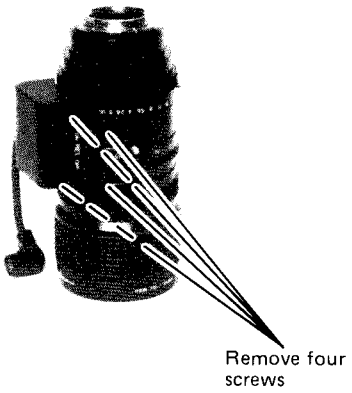

Fig. 3-3-1

o Remove two screws which hold the Iris Switch. (Fig. 3-3-2 and Fig. 3-3-3)

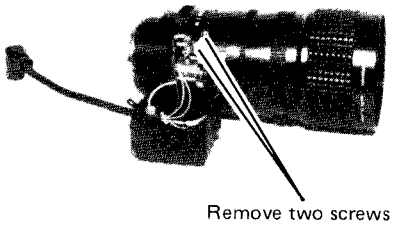

Fig. 3-3-2

Fig. 3-3-3

4. Adjustment Procedure

4-1 Remote Control Unit (RCU) WV-RC35 Adjustment

- o Disassemble the Remote Control Unit (RCU) while referring to 2-1 Remote Control Unit WV-RC35 on page 8.
- o Refer to page 16 for the test points and adjusting controls.

(a) +17V adjustment

Test point:	TP2 (+17V)	Power board
Adjust:	VR1 (+17V ADJ)	Power board

- o Connect ther digital voltmeter (DVM) probe between TP2 (+17V) and TP3 (GND) ground.
- o Adjust VR1(+17V ADJ) for +17V±0.05V

(b) +5V adjustment

Test point:	TP1 (+5V)	Main board
Adjust:	VR1 (+5V ADJ)	Main board

- o Connect the digital voltmeter (DVM) probe between TP1 (+5V) on the Main board and TP3 (GND) ground on the Power board.
- o Adjust VR1(+5V ADJ) for +5V±0.05V

4-2 RCU Adaptor WV-AD37 Adjustment

- o Disassemble the RCU Adaptor WV-AD37 while referring to 2-2 RCU Adaptor WV-AD37 on page 8.
- o Refer to page 16 for the test points and adjusting controls.

(a) Connection and setting up for adjustment

Connection

- o Mount the RCU Adaptor WV-AD37 on the camera while connecting the 32-pin junction connector on the camera and the RCU adaptor.
- o Connect the RCU Adaptor WV-AD37 and RCU using a 30ft (10m) 14-pin studio cable (14C-30).
- o Connect the VIDEO OUTPUT connector on the RCU to the VIDEO INPUT connector of color monitor through the vectorscope using a coaxial cable.
- o Terminate the video input of color monitor with 75 ohms.

Position of controls and switches on the camera, RCU and RCU Adaptor

(Camera)
- Right Side -
[Control Board]

Standby switch (SW1) :	Right (ON) position
AGC selection switch (SW2) :	Center (LOW) position

[Power/Sync Board]

Level indicator switch (SW3) : (NTSC only)	Upper (ON) position
H.blanking width switch (SW2) :	Upper (1, 10.9 μsec) position
V.blanking width switch (SW1) :	Upper (1, 20H) position

- Left Side -
[Audio Board]

DC power selection switch (SW2) :	Left (EXT) position

- Rear Side -
[Mother Board]

VTR compatibility switch (SW1) :	Upper (⊕) position

(RCU)

Total pedestal control :	Mechanical center position
Red gain control :	Mechanical center position
Blue gain control :	Mechanical center position
Auto Iris control :	Mechanical center position
Cable length compensation switch :	10m (30ft)
Color Bar/Camera Selection switch :	Upper (BAR) position

(RCU Adaptor)

DC Power Selection Switch :	Upper (RCU) position

- o The camera must be completely aligned before RCU adjustment is made.

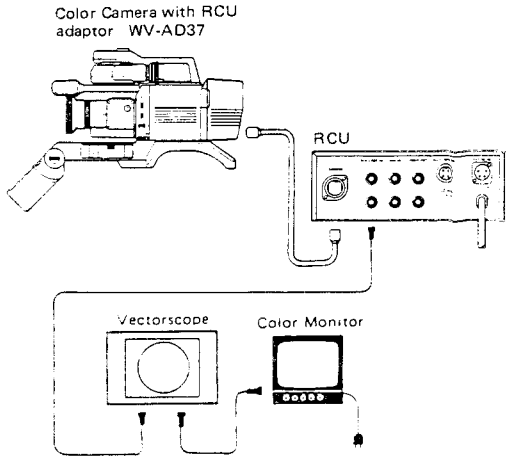

Fig. 4-2-1

(b) Color bar width adjustment

Test point:	Video Output Connector	
Adjust:	VR101 (C/B WIDTH)	Main board

- o Connect the oscilloscope to Video Output Connector on the rear of the RCU adaptor.
- o Adjust VR101 (C/B WIDTH) on the Main board so tht the black of color bar width is 5.4 µsec ± 0.1 µsec. (Fig. 4-2-2)

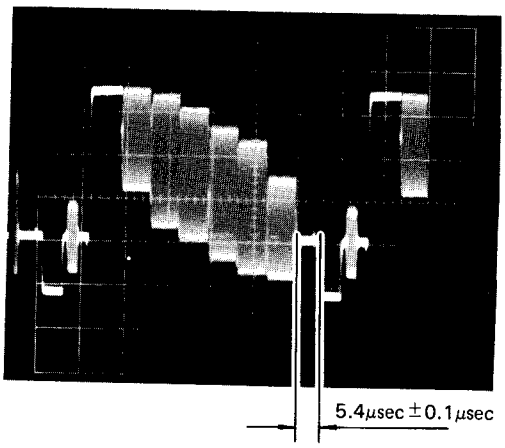

Fig. 4-2-2

(c) Carrier balance and white balance adjustment

Test point:	Video Output Connector	
Adjusts:	VR102	Main board
	(C/B R-Y_L WHITE BAL)	
	VR111	Main board
	(C/B B-Y_L WHITE BAL)	
	VR106	Main board
	(C/B B-Y_L CARRIER BAL)	
	VR107	Main board
	(C/B R-Y_L CARRIER BAL)	

- o Observe the oscilloscope to the terminated Video Output Connector.
- o Adjust VR106 (C/ B B-Y_L CARRIER BAL) and VR107 (C/B B-Y_L CARRIER BAL) on the Main board alternately so that the carrier on the black level of video signal becomes minimum. (Fig. 4-2-3)

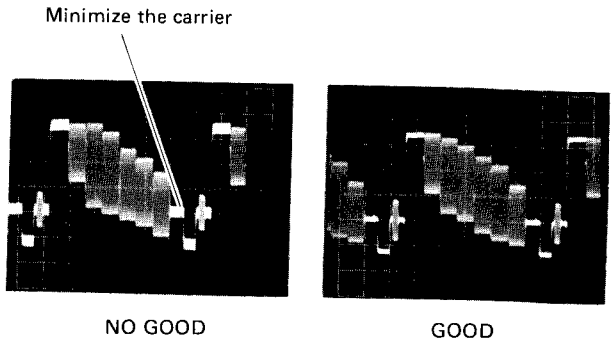

Fig. 4-2-3

- o Adjust VR111 (C/B B-Y_L WHITE BAL) and VR102 (C/B R-Y_L WHITE BAL) on the Main board alternately so that the carrier on the white level of video signal becomes minimum. (Fig. 4-2-4)

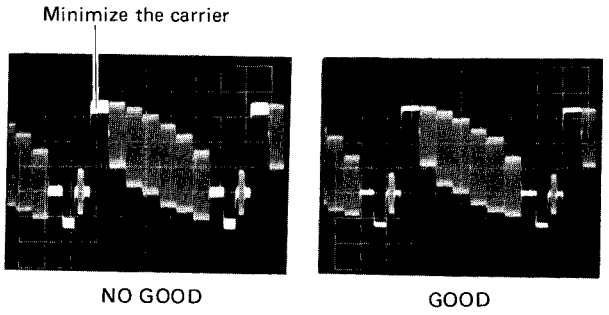

Fig. 4-2-4

- o Repeat adjusting VR111, VR102, VR106 and VR107 so that the carrier on the black and white level of video signal is minimum.

(d) Chroma and Burst adjustment

Test point:	Video output connector	
Adjusts:	VR108	Main board
	(R-Y/B-Y BALANCE)	
	VR109	Main board
	(C/B CHROMA GAIN)	
	CT1	Main board
	(SC 90° PHASE)	
	VR104	Main board
	(BURST PHASE)	
	VR105	Main board
	(BURST GAIN)	
[PAL only)		
	VR103	Main board
	(SC R BALANCE)	
	CT2	Main board
	(SC 270° PHASE)	

[Adjustment for NTSC model]

- o Observe the vectorscope.
- o Set the gain switch of the vectorscope to 75%.
- o Turn the phase control of vectorscope so that the burst vector aligns with the burst axis of the vectorscope.
- o Adjust VR104 (BURST PHASE) so that the all vectors fall into their respective boxes on the vectorscope.(Fig .4-2-5)
- o Set the gain control of vectorscope to the calibration position.
- o Adjust VR108 (R-Y/B-Y BALANCE), VR109 (C/B CHROMA GAIN) and CT1 (SC 90° PHASE) so that the all vectors fall into their respective boxes on the vectorscope. (Fig. 4-2-5)

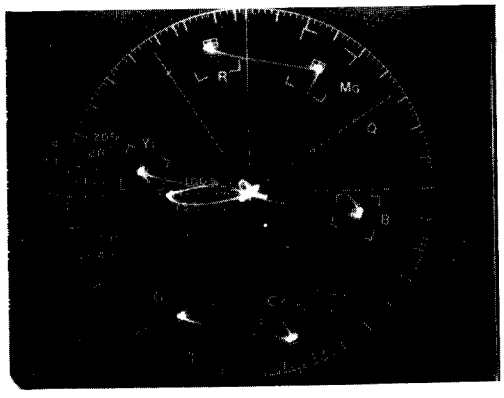

Fig. 4-2-5

- o Repeat adjusting above steps until all vectors fall into their respective boxes on the vectorscope.
- o Adjust VR105 (BURST GAIN) so that the burst vector aligns on the burst axes, its amplitude is at 75% position and other vectors fall into their respective boxes on the vectorscope. (Fig. 4-2-6)

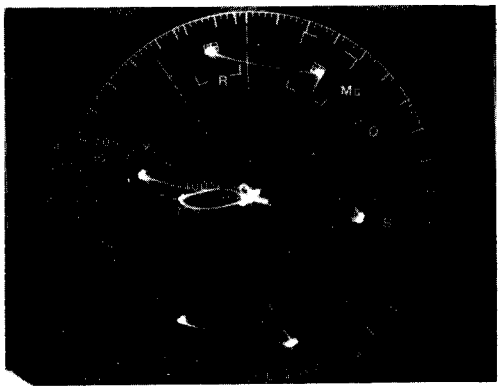

Fig. 4-2-6

[Adjustment for PAL model]

- o Observe the vectorscope.
- o Set the gain switch of the vectorscope to 75%.
- o Adjust VR104 (BURST PHASE) and the phase control of vectorscope so that the burst vectors position on the burst axes on the vectorscope. (Fig. 4-2-7)

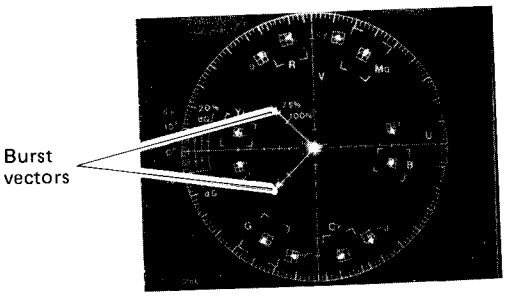

Fig. 4-2-7

- o Adjust VR108 (R-Y/B-Y BALANCE), VR109 (C/B CHROMA GAIN), CT1 (SC 90° PHASE), VR103 (SC R BALANCE) and CT1 (SC 270° PHASE) so that the all vectors fall into their respective boxes on the vectorscope. (Fig. 4-2-8)

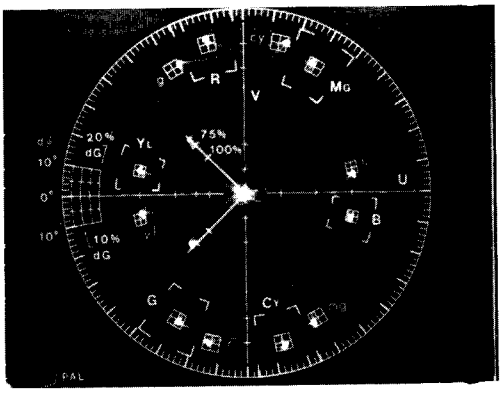

Fig. 4-2-8

- o Repeat adjusting above steps until all vectors fall into their respective boxes on the vectorscope.
- o Adjust VR105 (BURST GAIN) so that the burst vectors alignson the burst axes, their amplitude are at 75% position and other vectros fall into their respective boxes on the vectorscope. (Fig. 4-2-9)

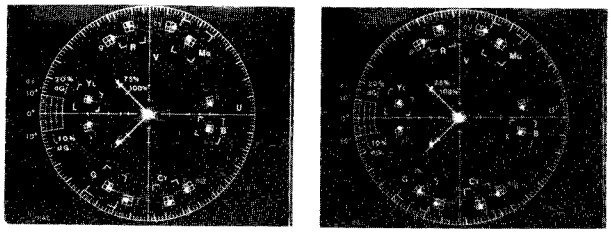

NO GOOD GOOD

Fig. 4-2-9

4-3 Camera Remote Controller WV-CR12 Adjustment

- o Disassemble the Camera remoto Controller WV-CR12 while referring to 2-3 Camera Remoto Controller WV-CR12 on page 8 and 9
- o Refer to page 17 for the test points and adjusting controls.

(a) Connection

- o Install the 1" viewfinder on the camera remote controller and connect the viewfinder connector to the EVF Connector on the Camera Remote Controller.
- o Connect the control cable between the EVF/Camera Remote Connector on the camera and the Camera Connector on the Camera Remote Controller.
- o Connect the Monitor Output Connector on the Camera Remote Controller to the Video Input Connector of Color Monitor using a coaxial cable.
- o Connect the camera cable from the Power Supply to the camera. (Fig. 4-3-1)

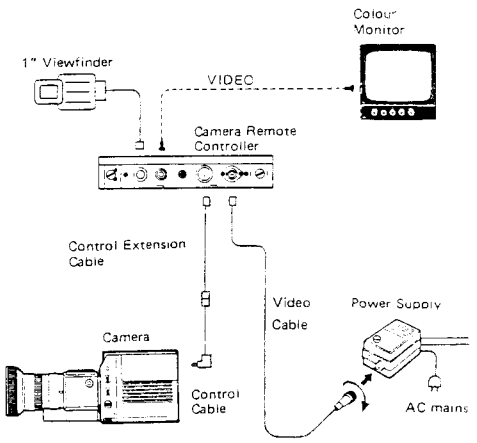

Fig. 4-3-1

(b) + 5V adjustment

Test point:	TP2 (+ 5V)	CR Main board
Adjust:	VR1 (+ 5V ADJ)	CR Main board

- o Connect the digital voltmeter (DVM) Probe between TP2 (+ 5V) and TP3 (GND) ground.
- o Adjust VR1 (+ 5V ADJ) for + 5.0V ± 0.05V.

(c) Timer frequency adjustment

Test point:	TP5 (TIMER FREQ)	CR Main board
Adjust:	CT1 (TIMER FREQ ADJ)	CR Main board

- o Connect the frequency counter to TP5 (TIMER FREQ) and TP3 (GND) ground.
- o Adjust CT1 (TIMER FREQ ADJ) for 32.768KHz ± 0.03KHz.

4-4 Pan/Tilt Head WV-PH10 Adjustment

- o Disassemble the Pan/Tilt Head WV-PH10 while referring to 2-4 Pan/Tilt Head WV-PH10 on page 9.
- o Refer to page 17 for the test points and adjusting controls.

(a) Connection and setting up for adjustment

Connection

- o Install the 1" viewfinder on the camera remote controller and connect the viewfinder connector to the EVF Connector on the Camera Remote Controller.
- o Connect the control cable between the EVF/Camera Remote Connector on the camera and the Camera Connector on the Camera Remote Controller.
- o Connect the Monitor Output Connector on the Camera Remote Controller to the Video Input Connector of Color Monitor using a coaxial cable.
- o Connect the remote control cable/connector on the pan/tilt head to the 5-pin Pan/Tilt Connector on the camera.

Position of switch on the Camera Remote Controller and Pan/Tilt Head

(Camera Remote Controller)
Operation Switch ——————— ON
Lock Switch ——————— OFF
Pan/Tilt-Lens Selection Switch —— Pan/Tilt

(Pan/Tilt Head)
Operation Switch ——————— ON

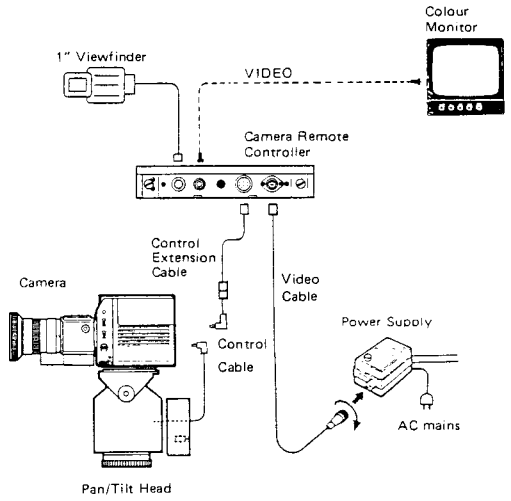

Fig. 4-4-1

(b) Panning speed adjustment

Test piont:	Pin 7 of IC3	Control board
Adjust:	VR1	Control board
	(PANNING SPEED SET)	

- o Connect the digital voltmeter (DVM) probe between pin 7 of IC3 and pin 4 of CN1 (ground).
- o Press the LEFT switch on the Camera Remote Controller until the Pan/Tilt head stops at the left end.
- o Adjust VR1 (PANNING SPEED SET) for +5.1V ± 0.01V.

(c) Tilting speed adjustment

Test point:	Pin 7 of IC4	Control board
Adjust:	VR2	Control board
	(TILTING SPEED SET)	

- o Connect the digital voltmeter (DVM) probe between pin 7 of IC4 and pin 4 of CN1 (ground).
- o Press the UP switch on the Camera Remote Controller until the Pan/Tilt head stops at the upper end.
- o Adjust VR2 (TILTING SPEED SET) for +5.1V ± 0.01V.

LOCATION OF TEST POINTS AND ADJUSTING CONTROLS
REMOTE CONTROL UNIT (RCU) WV-RC35

CONTROL BOARD

— Component Side —

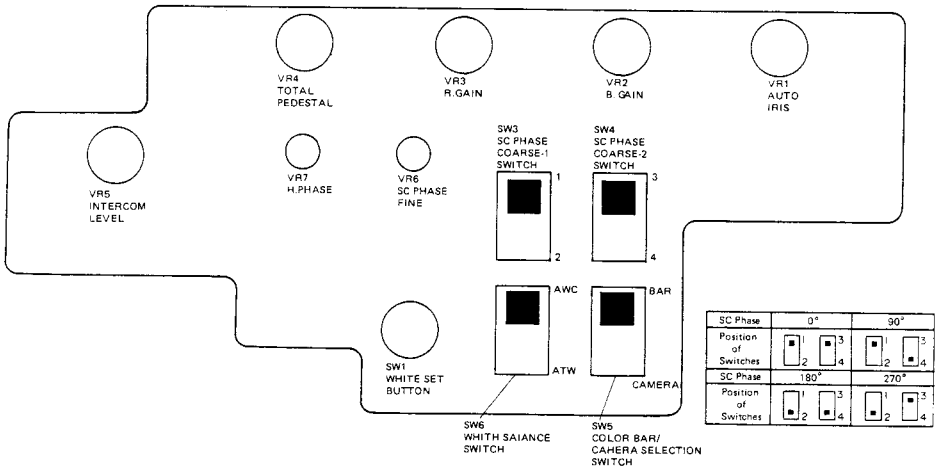

POWER BOARD

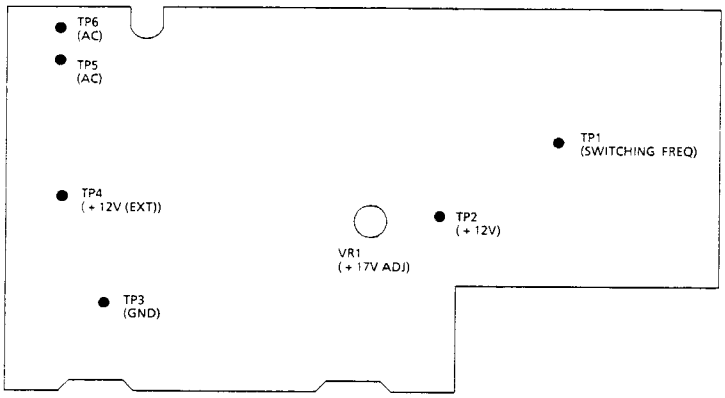

MAIN BOARD

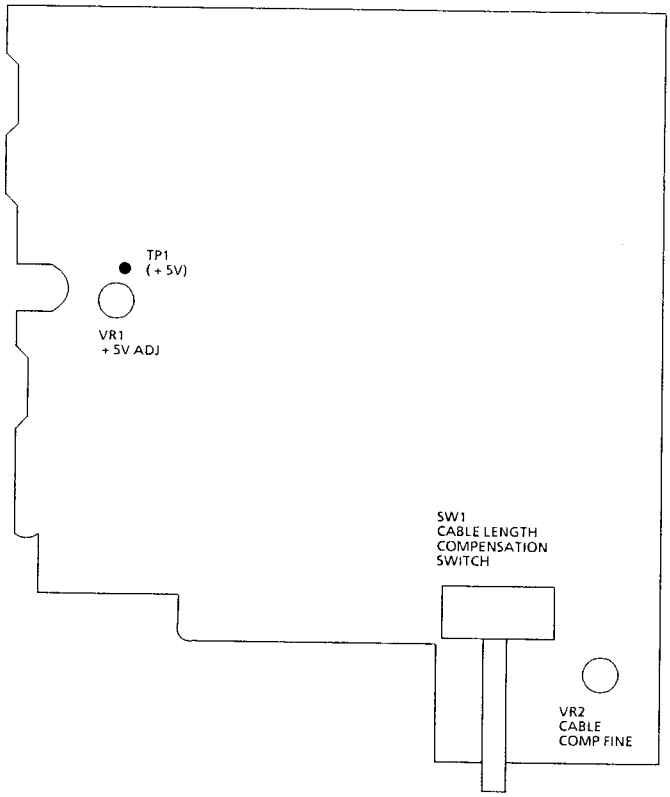

RCU ADAPTOR WV-AD37

— Component Side —

MAIN BOARD

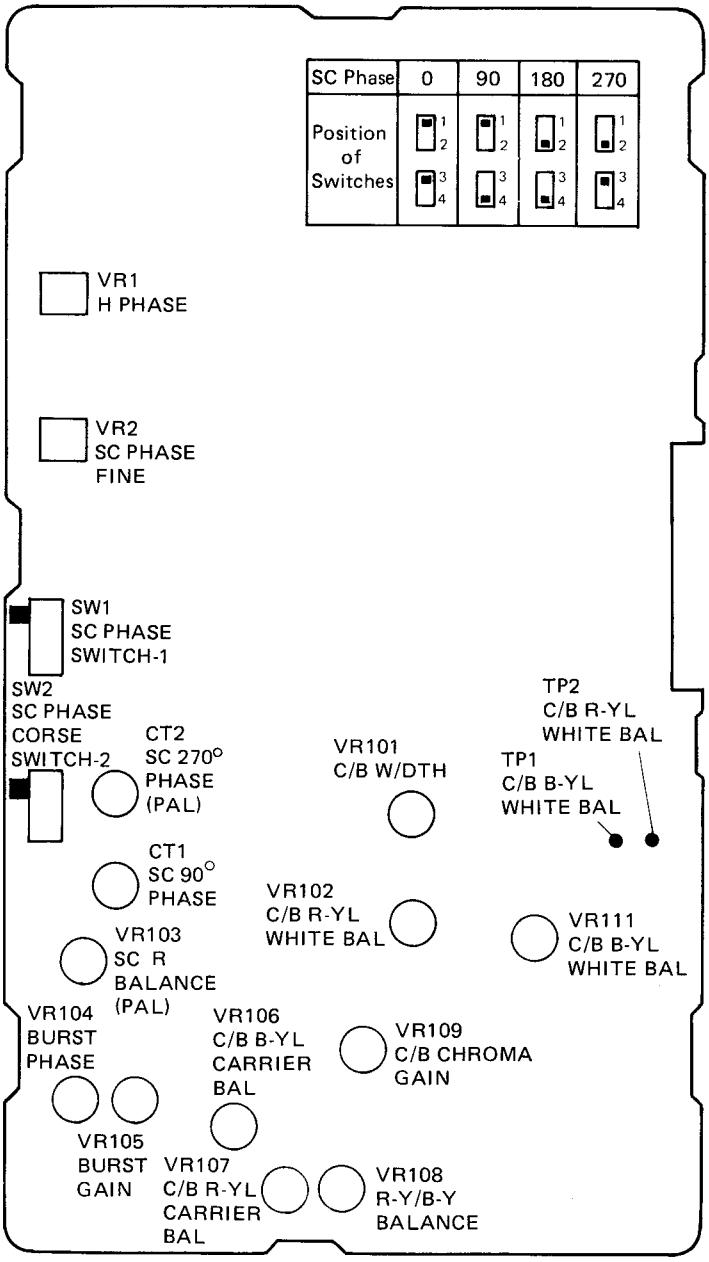

CAMERA REMOTO CONTROLLER WV-CR12

CONTROL BOARD

—Component Side—

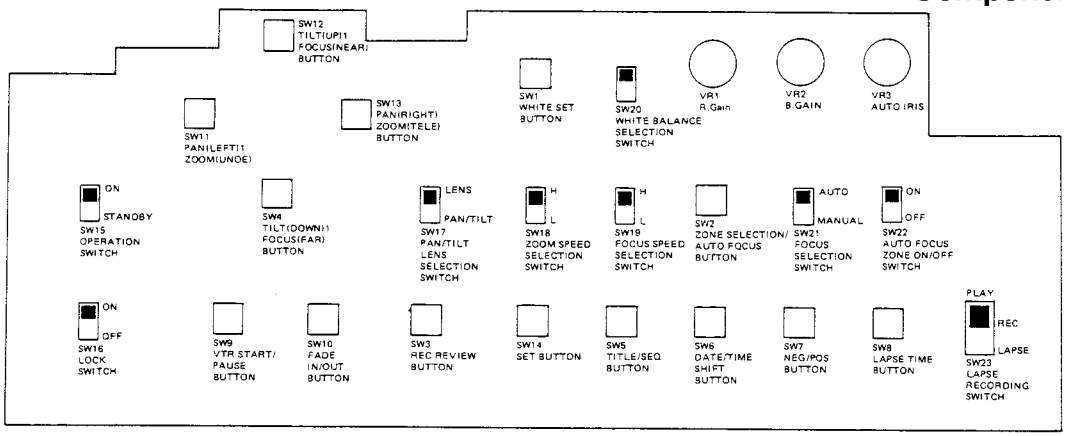

MAIN BOARD

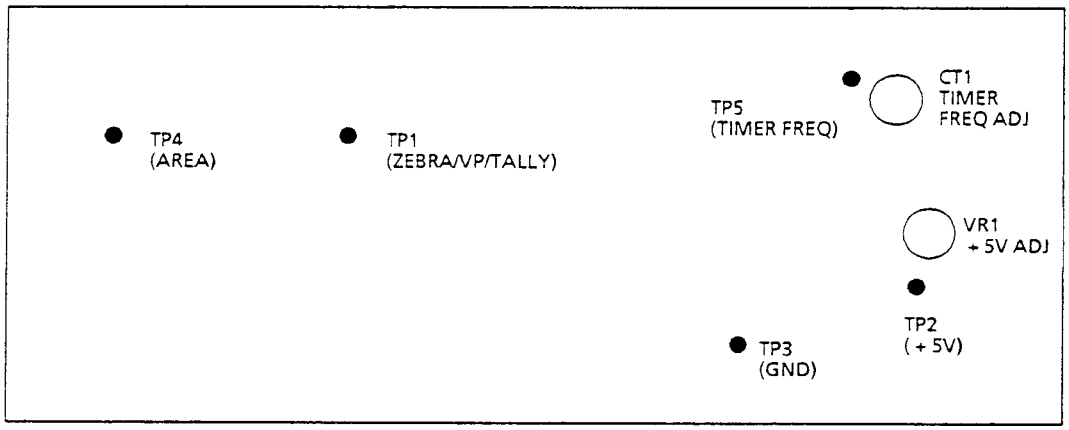

PAN/TILT HAED WV-PH10

CONTROL BOARD

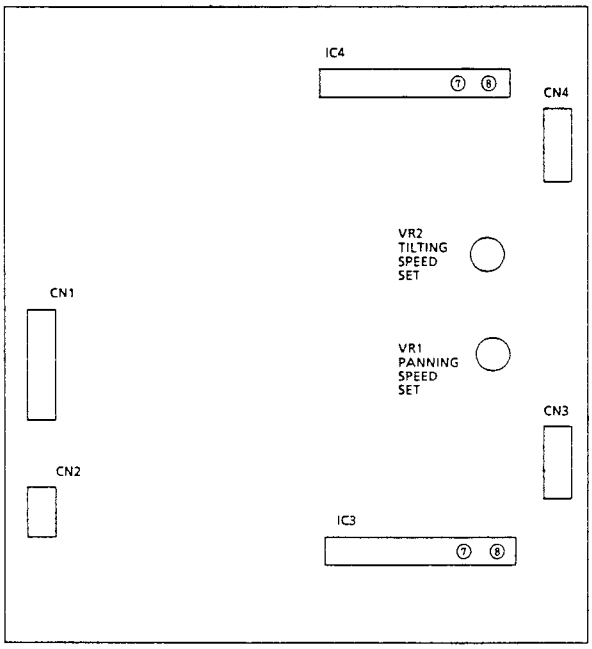

CABLE INFORMATION

CONTROL CABLE

14 Pin Connector Pin No.	Wire No.	Signal	UL No.	Product Description	AWG Size	Connection 14 Pin Side	Connection 10 Pin Side	10 Pin Connector Pin No.
2	3	+12V	1571	*1	16			10
3	2	AUDIO (L)	1571	COXIAL CABLE	24			7
4&5		AUDIO GROUND	1571		22			8
6	1	VIDEO	1631	COXIAL CABLE	28			1
7		VIDEO GROUND	1631		22			2
14	5	STANDBY/L CH	1061	*2	26			5
1	–	GROUND	–	SHIELD CABLE	20			6
						160KΩ		4
13	6	REC START/ PAUSE CONT	1061	*2	26	30KΩ		6
8		NOT USED						3
9		NOT USED						
10		NOT USED						
11		NOT USED						
12		NOT USED						

NOTE : *1 Tinned Copper, vinyl insulated, conductors cable
: *2 2 Conductors shield cable.

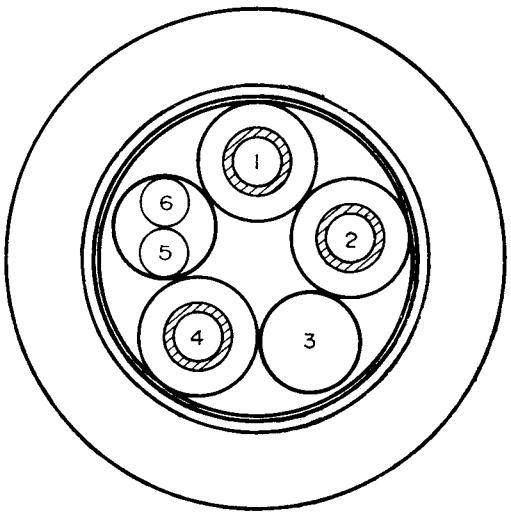

Section of Cable

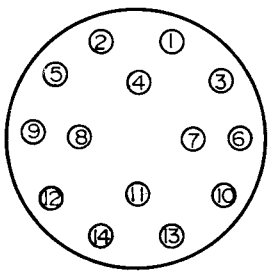

14P Connector

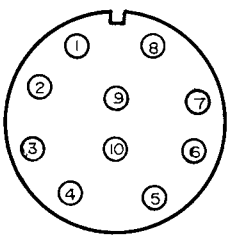

10P Connector

WV-CA11

10 Pin Connector No.	Wire No.	Signal	UL No.	Product Description	AWG No.	10 Pin Connector No.
1	1	VIDEO	1631	COXIAL CABLE	28	1
2		VIDEO GROUND				2
3	2	SERIAL DATA	1571	*1	28	3
4	3	SERIAL CLOCK	1571	*1	28	4
5	4	STANDBY/L CH	1571	*2	28	5
6	6	REC START/ PAUSE CONT	1571	*1	28	6
7	5	AUDIO (L)	1571	*2	28	7
8		AUDIO GROUND				8
9		GROUND		SHIELD CABLE		9
10	7	+12V	1571	*1	24	10

NOTE : *1 Tinned Copper, vinyl Insulated, Conductors Cabled.
: *2 2 Conductors Shild Cabled.

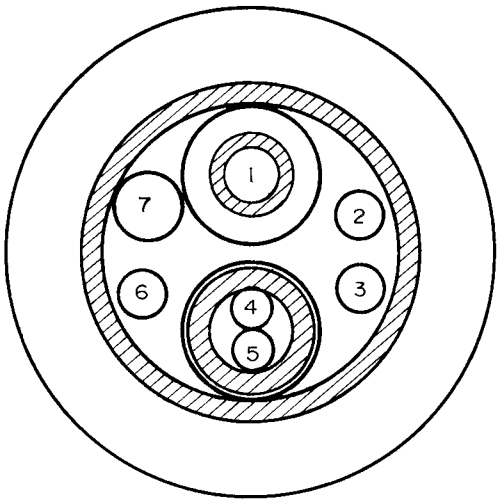

Section of Cable

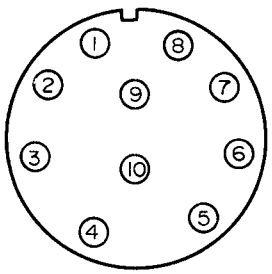

10Pin Connector
(Camera side)

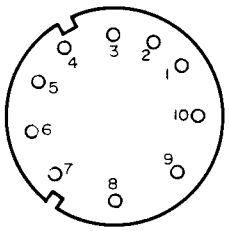

10 Pin Connector
(WV-CR12 Side)

BLOCK DIAGRAM OF REMOTE CONTROL UNIT WV-RC35

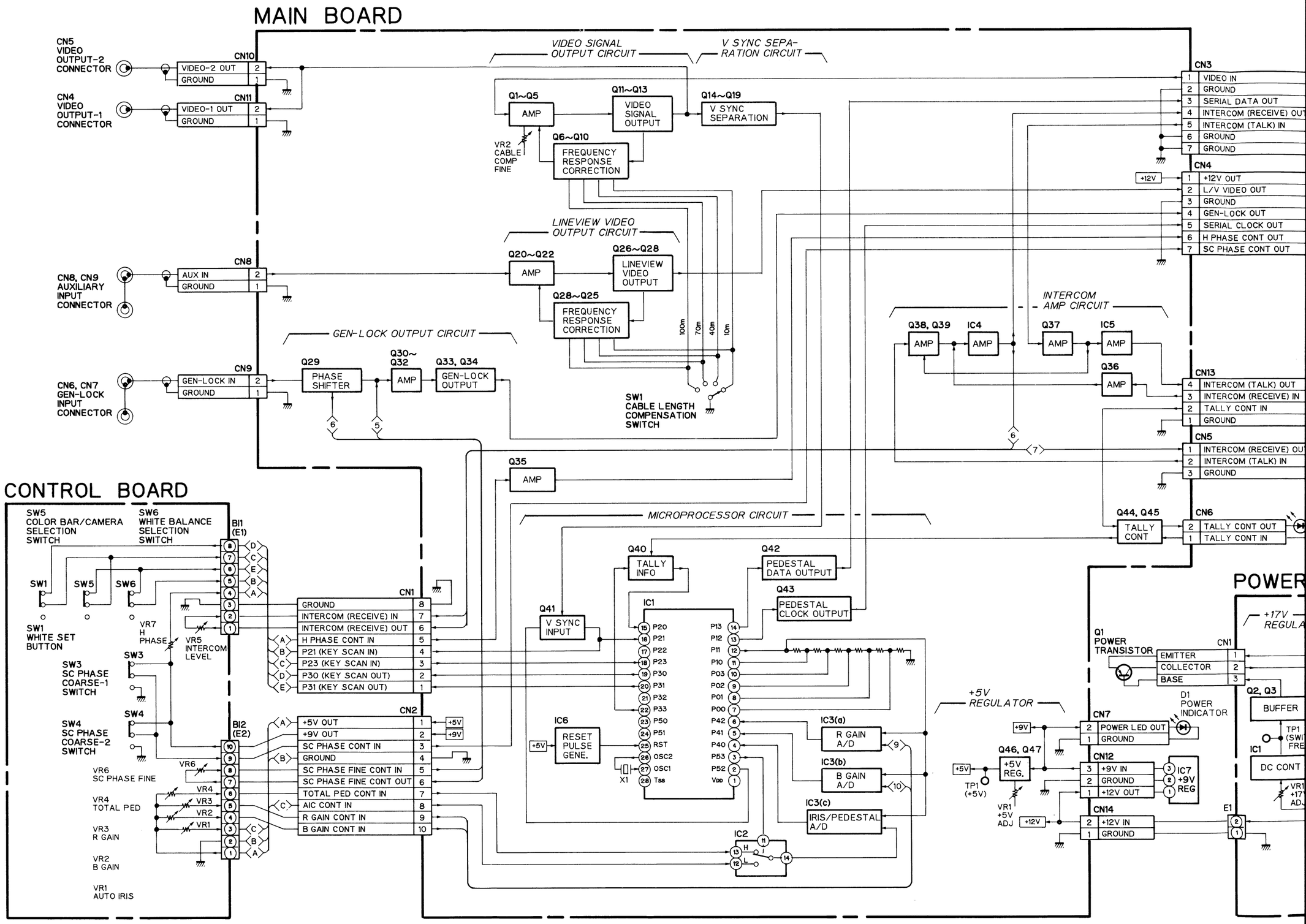

BLOCK DIAGRAM OF REMOTE CONTROL UNIT WV-RC35

ARD

VIDEO SIGNAL OUTPUT CIRCUIT

V SYNC SEPARATION CIRCUIT

Q1~Q5 AMP

Q11~Q13 VIDEO SIGNAL OUTPUT

Q14~Q19 V SYNC SEPARATION

VR2 CABLE COMP FINE

Q6~Q10 FREQUENCY RESPONSE CORRECTION

LINEVIEW VIDEO OUTPUT CIRCUIT

Q20~Q22 AMP

Q26~Q28 LINEVIEW VIDEO OUTPUT

Q28~Q25 FREQUENCY RESPONSE CORRECTION

100m 70m 40m 10m

SW1 CABLE LENGTH COMPENSATION SWITCH

-LOCK OUTPUT CIRCUIT

Q30~Q32 AMP

Q33, Q34 GEN-LOCK OUTPUT

Q35 AMP

MICROPROCESSOR CIRCUIT

Q40 TALLY INFO

Q42 PEDESTAL DATA OUTPUT

Q43 PEDESTAL CLOCK OUTPUT

Q41 V SYNC INPUT

IC1

P20 P21 P22 P23 P30 P31 P32 P33 P50 P51 RST OSC2 OSC1 Tss

P13 P12 P11 P10 P03 P02 P01 P00 P42 P41 P40 P53 P52 VDD

IC6 RESET PULSE GENE.

X1

IC3(a) R GAIN A/D

IC3(b) B GAIN A/D

IC3(c) IRIS/PEDESTAL A/D

IC2

CN1

ECEIVE) IN	8
ECEIVE) OUT	7
NT IN	6
AN IN)	5
AN IN)	4
AN OUT)	3
AN OUT)	2
	1

CN2

	1 +5V
	2 +9V
ONT IN	3
	4
NE CONT IN	5
NE CONT OUT	6
CONT IN	7
	8
IN	9
IN	10

CN3

1	VIDEO IN
2	GROUND
3	SERIAL DATA OUT
4	INTERCOM (RECEIVE) OUT
5	INTERCOM (TALK) IN
6	GROUND
7	GROUND

CN4

1	+12V OUT
2	L/V VIDEO OUT
3	GROUND
4	GEN-LOCK OUT
5	SERIAL CLOCK OUT
6	H PHASE CONT OUT
7	SC PHASE CONT OUT

+12V

CN11 14PIN CAMERA CONNECTOR

INTERCOM AMP CIRCUIT

Q38, Q39 IC4 AMP

Q37 IC5 AMP

Q36 AMP

CN13

4	INTERCOM (TALK) OUT
3	INTERCOM (RECEIVE) IN
2	TALLY CONT IN
1	GROUND

CN3 TALLY/INTERCOM INPUT CONNECTOR

CN5

1	INTERCOM (RECEIVE) OUT
2	INTERCOM (TALK) IN
3	GROUND

CN1 INTERCOM JACK

Q44, Q45 TALLY CONT

CN6

2	TALLY CONT OUT
1	TALLY CONT IN

D2 TALLY INDICATOR

+5V REGULATOR

Q46, Q47 +5V REG.

TP1 (+5V)

VR1 +5V ADJ

CN7

2	POWER LED OUT
1	GROUND

D1 POWER INDICATOR

CN12

3	+9V IN
2	GROUND
1	+12V OUT

IC7 +9V REG

CN14

2	+12V IN
1	GROUND

E1

POWER BOARD

+17V REGULATOR

Q1 POWER TRANSISTOR

CN1

EMITTER	1
COLLECTOR	2
BASE	3

TP6 (AC)

D1

TP5 (AC)

Q2, Q3 BUFFER

TP1 (SWITCHING FREQ)

IC1 DC CONT

VR1 +17V ADJ

F1 3A

F2 3A

TP2 (+12V)

TP4 (+12V(EXT))

TP3 (GND)

CN2

3	+12V OUT (EXT)
2	+17V OUT (INT)
1	+12V IN

T1 POWER TRANSFORMER

SW2 AC/DC SELECTION SWITCH DC AC

SW1 OPERATION SWITCH

F10 2A

CN10 AC POWER CORD

CN2 4PIN EXTERNAL DC INPUT CONNECTOR

BLOCK DIAGRAM OF RCU ADAPTOR WV-AD37

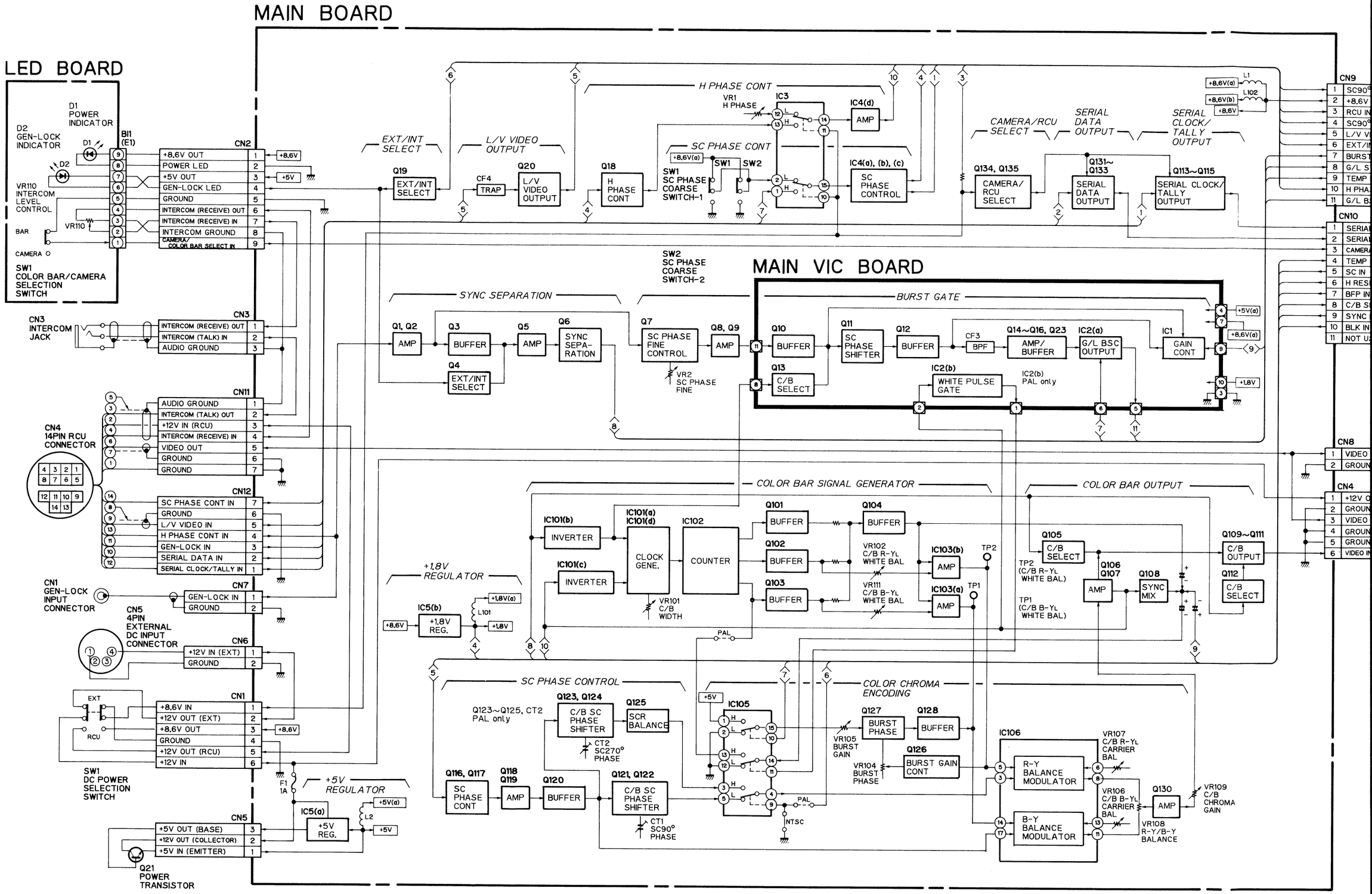

BLOCK DIAGRAM OF RCU ADAPTOR WV-AD37

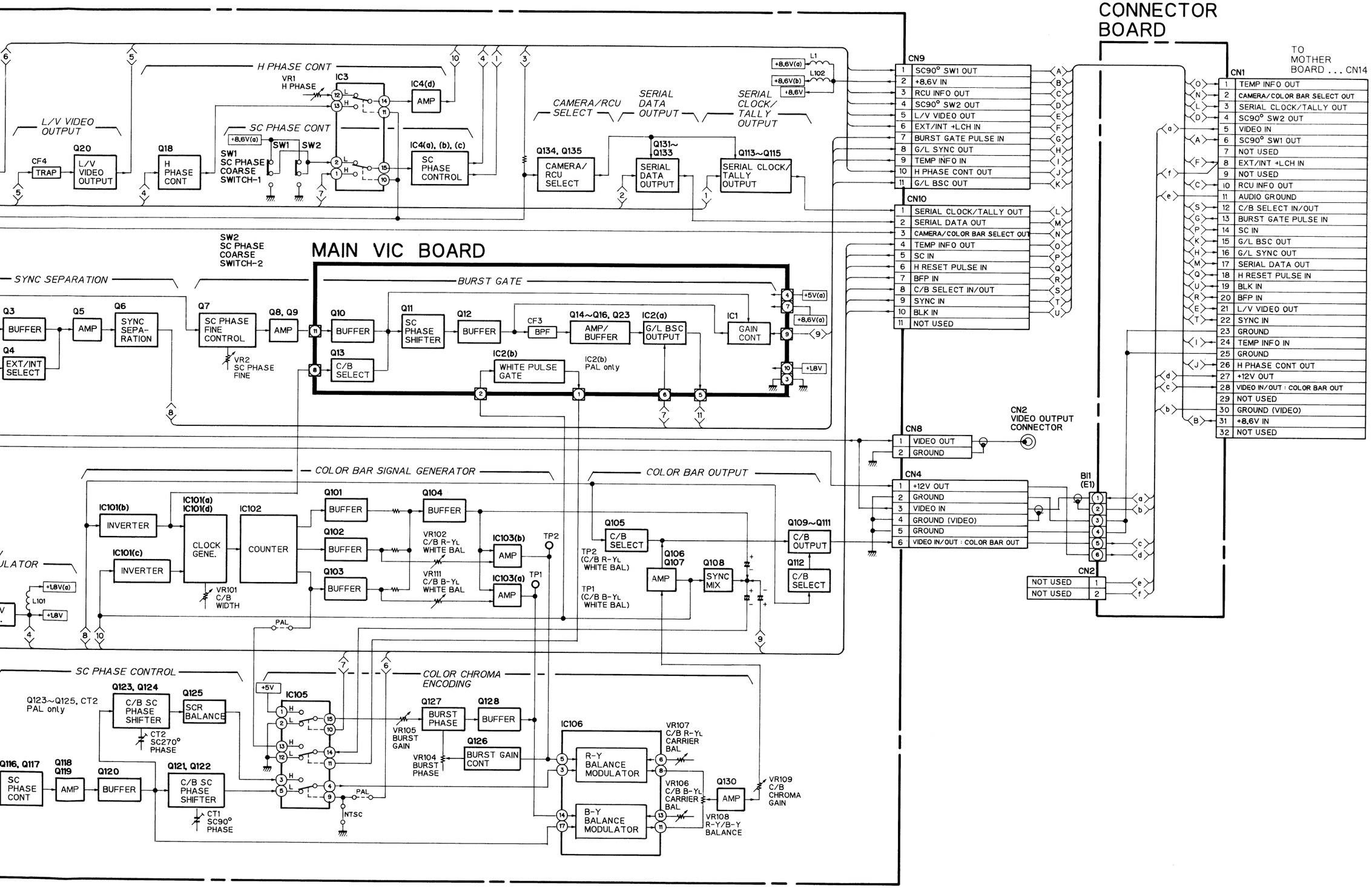

BLOCK DIAGRAM OF CAMERA REMOTE CONTROLLER WV-CR12

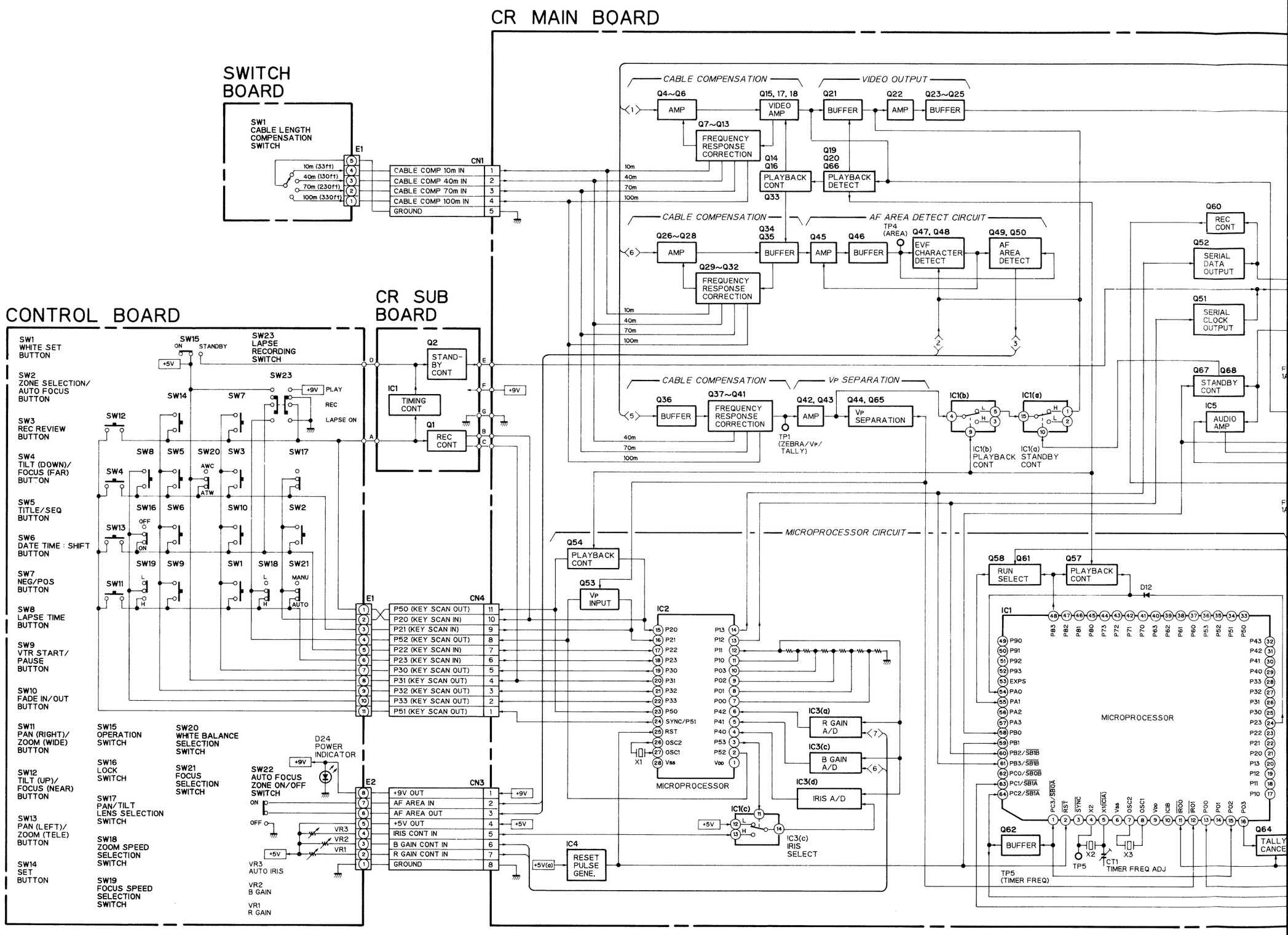

BLOCK DIAGRAM OF CAMERA REMOTE CONTROLLER WV-CR12

CR MAIN BOARD

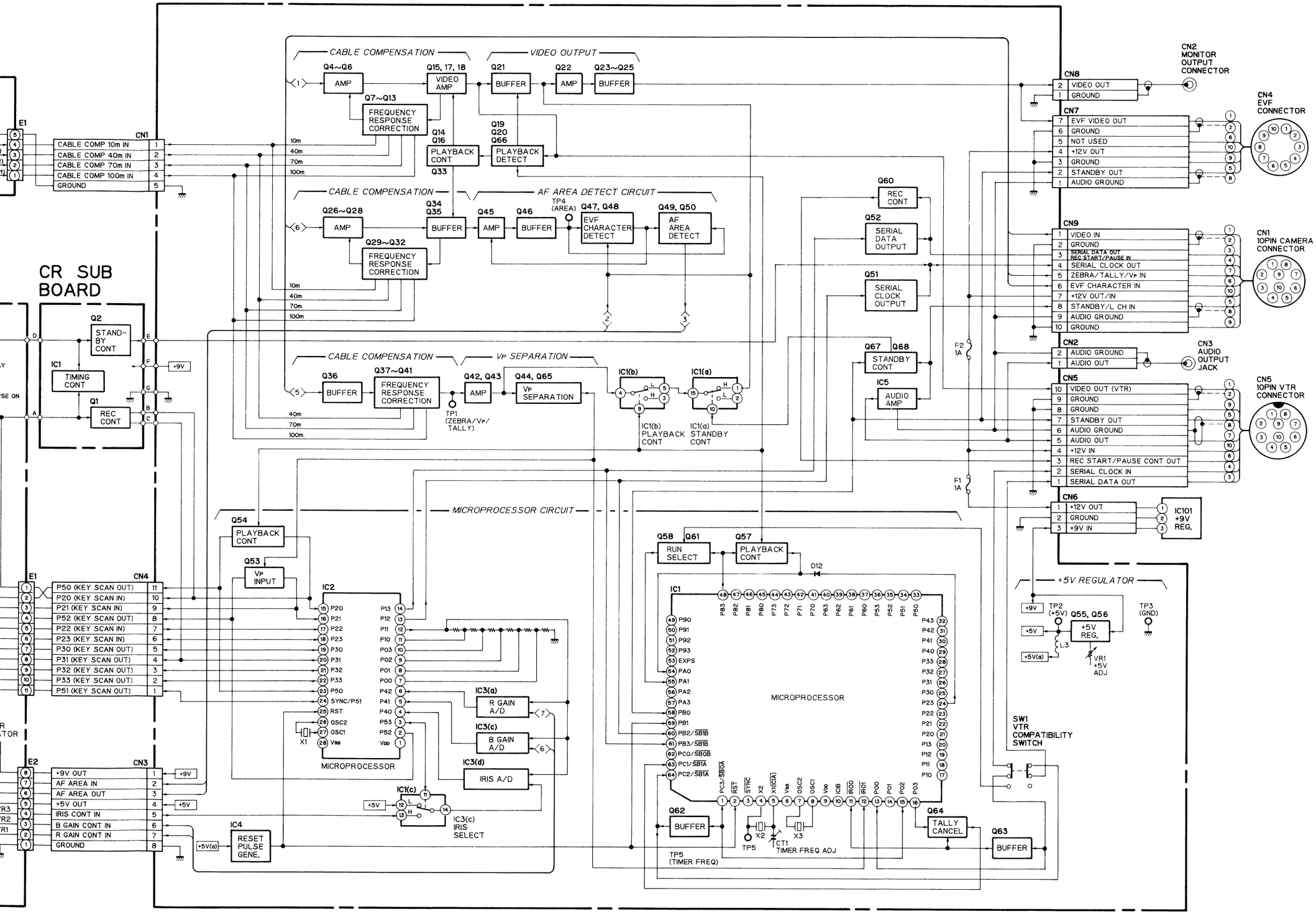

SCHEMATIC DIAGRAM OF REMOTE CONTROL UNIT WV-RC35

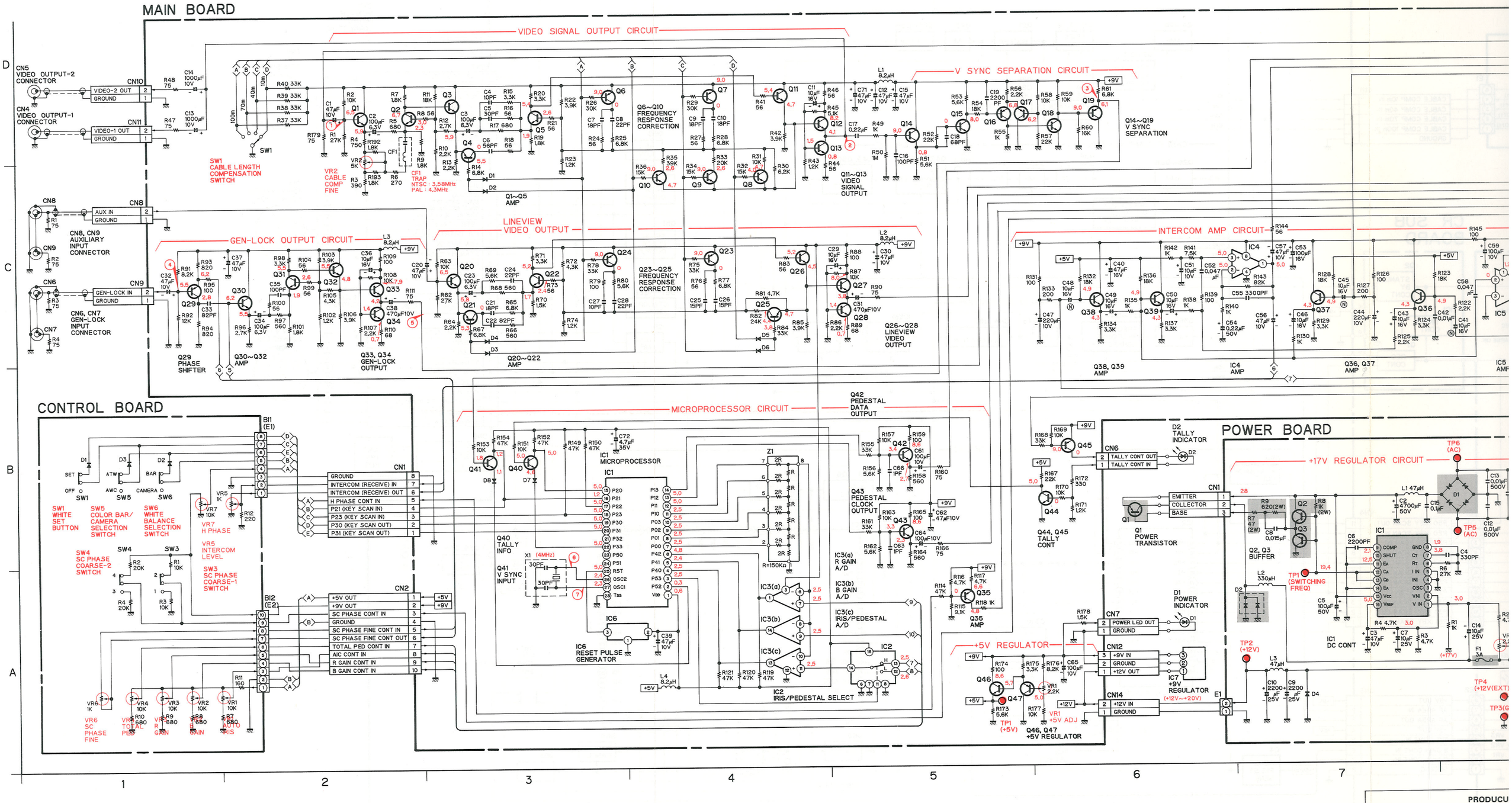

PRODUCU
The shaded area on this schematic dia
for protection from X-Radiation, fire
it is essential that only manufactur
components in the shaded areas of the

SCHEMATIC DIAGRAM OF REMOTE CONTROL UNIT WV-RC35

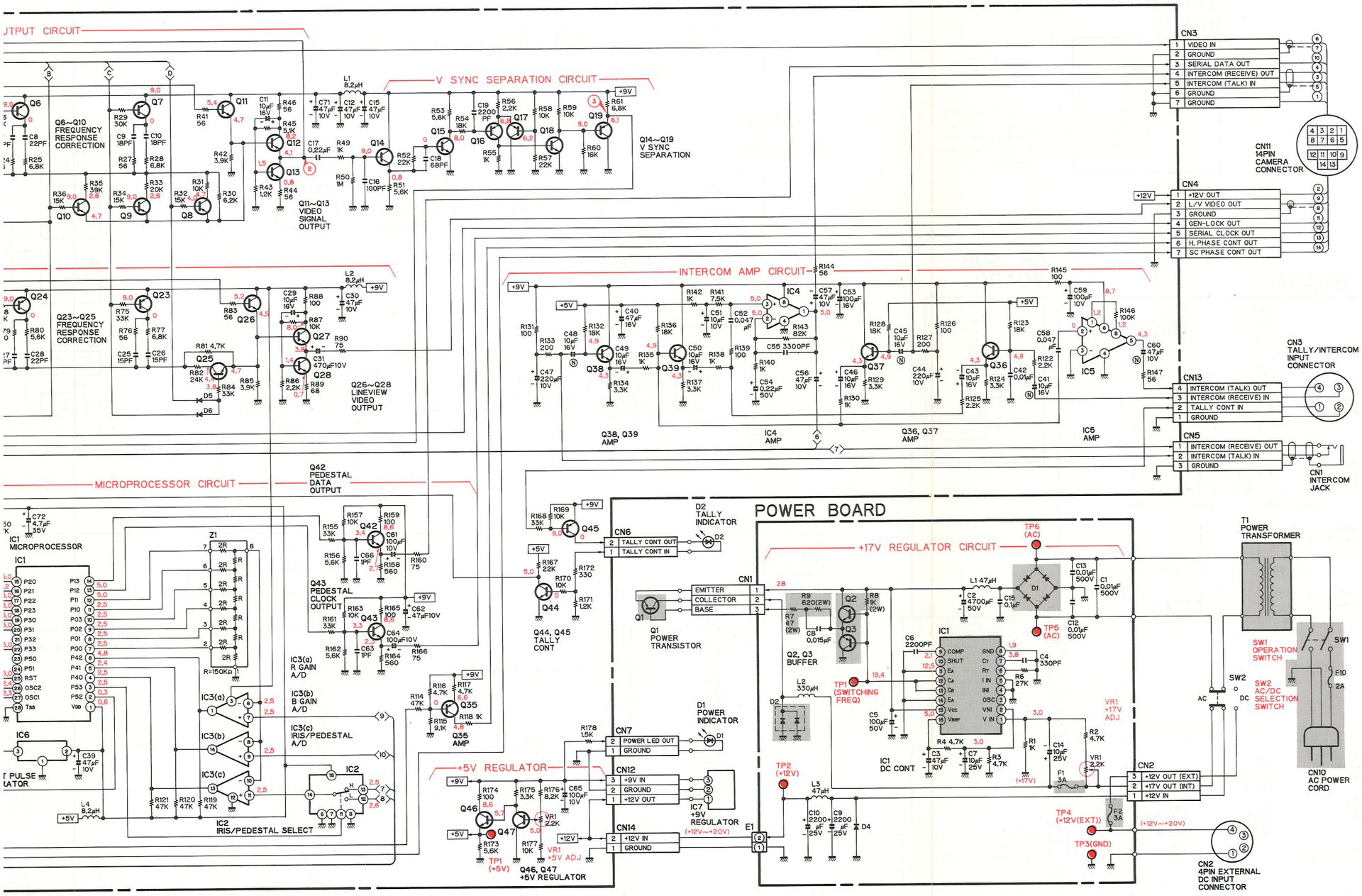

1. 0.2V/DIV, 10μs/DIV

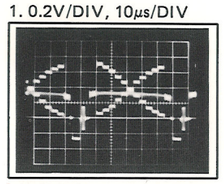

2. 0.5V/DIV, 10μs/DIV

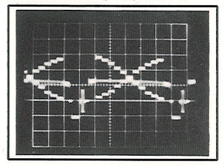

3. 0.5V/DIV, 5ms/DIV

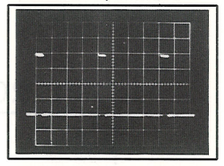

4. 0.2μs/DIV, 10μs/DIV

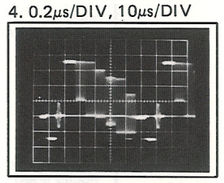

5. 0.2V/DIV, 10μs/DIV

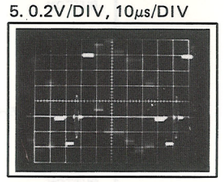

6. 1V/DIV, 10μs/DIV

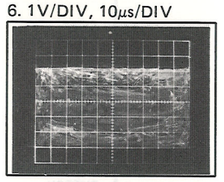

7. 1V/DIV, 10μs/DIV

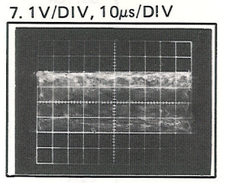

PRODUCUT SAFETY NOTE

The shaded area on this schematic diagram incorporates special features important for protection from X-Radiation, fire and electrical shock hazards. When servicing it is essential that only manufacturer's specified parts be used for tha critical components in the shaded areas of the schematic.

WV-RC35
MAIN BOARD

IC1	MN1551CVT3S		B4
IC2	MN4053BS		A5
IC3	M5234FP		A4
IC4	NJM3414M		C7
IC5	NJM386M		C8
IC6	MN1280T		A4
IC7	AN6541		A6
Q1	2SD601-QR	(Y)	D2
Q2	2SC2404-CD	(U)	D3
Q3	2SC2404-CD	(U)	D3
Q4	2SA1022-C	(E)	D3
Q5	2SC2404-CD	(U)	D3
Q6	2SA1022-C	(E)	D3
Q7	2SA1022-C	(E)	D4
Q8	2SA1022-C	(E)	C10
Q9	2SA1022-C	(E)	C10
Q10	2SA1022-C	(E)	C10
Q11	2SC2404-CD	(U)	D4
Q12	2SD601-QR	(Y)	D5
Q13	2SD601-QR	(Y)	D5
Q14	2SA1022-C	(E)	D5
Q15	2SC2404-CD	(U)	D5
Q16	2SB709-Q	(A)	D5
Q17	2SB709-Q	(A)	D6
Q18	2SD601-QR	(Y)	D6
Q19	2SB709-Q	(A)	D6
Q20	2SD601-QR	(Y)	C3
Q21	2SA1022-C	(E)	C3
Q22	2SC2404-CD	(U)	C3
Q23	2SA1022-C	(E)	C4
Q24	2SA1022-C	(E)	C3
Q25	2SA1022-C	(E)	C4
Q26	2SC2404-CD	(U)	C4
Q27	2SD601-QR	(Y)	C5
Q28	2SD601-QR	(Y)	C5
Q29	2SA1022-C	(E)	C1
Q30	2SC2404-CD	(U)	C2
Q31	2SC2404-CD	(U)	C2
Q32	2SC2404-CD	(U)	C2
Q33	2SD601-QR	(Y)	C2
Q34	2SD601-QR	(Y)	C2
Q35	2SB709-Q	(A)	A5
Q36	2SD601-QR	(Y)	C7
Q37	2SD601-QR	(Y)	C7
Q38	2SD601-QR	(Y)	C6
Q39	2SD601-QR	(Y)	C6
Q40	2SD601-QR	(Y)	B3
Q41	2SD601-QR	(Y)	B3
Q42	2SD601-QR	(Y)	B5
Q43	2SD601-QR	(Y)	B5
Q44	2SD601-QR	(Y)	B6
Q45	2SB709-Q	(A)	B6
Q46	2SD601-QR	(Y)	A5
Q47	2SB709-Q	(A)	A5
D1	MA151K	(MH)	C3
D2	MA151K	(MH)	C3
D3	MA151K	(MH)	C3
D4	MA151K	(MH)	C3
D5	MA151K	(MH)	C4
D6	MA151K	(MH)	C4
D7	MA151K	(MH)	B3
D8	MA151K	(MH)	B3
Q1	2SB946-PQ		B6
D1	LN21RPH		A6
D2	YFLN31GCP		B6

POWER BOARD

IC1	NJM3524D	A7
Q2	2SC1384-QRS	B7
Q3	2SA684-QR	B7
D1	D5FB2052	B7
D2	ESAB82-004	A7
D4	RM4ZLFK1	A7

CONTROL BOARD

D1	MA165	B1
D2	MA165	B1
D3	MA165	B1

WV-RC35
MAIN BOARD

IC1	MN1551CVT3S		D2
IC2	MN4053BS		D2
IC3	M5234FP		D3
IC4	NJM3414M		C2
IC5	NJM386M		C2
IC6	MN1280T		
IC7	AN6541		D5
Q1	2SD601-QR	(Y)	B3
Q2	2SC2404-CD	(U)	C4
Q3	2SC2404-CD	(U)	C4
Q4	2SA1022-C	(E)	C3
Q5	2SC2404-CD	(U)	C4
Q6	2SA1022-C	(E)	C4
Q7	2SA1022-C	(E)	C4
Q8	2SA1022-C	(E)	D4
Q9	2SA1022-C	(E)	D3
Q10	2SA1022-C	(E)	D3
Q11	2SC2404-CD	(U)	C3
Q12	2SD601-QR	(Y)	C3
Q13	2SD601-QR	(Y)	D3
Q14	2SA1022-C	(E)	D2
Q15	2SC2404-CD	(U)	D2
Q16	2SB709-Q	(A)	D2
Q17	2SB709-Q	(A)	D2
Q18	2SD601-QR	(Y)	D2
Q19	2SB709-Q	(A)	D2
Q20	2SD601-QR	(Y)	B3
Q21	2SA1022-C	(E)	B3
Q22	2SC2404-CD	(U)	B3
Q23	2SA1022-C	(E)	B3
Q24	2SA1022-C	(E)	B3
Q25	2SA1022-C	(E)	C3
Q26	2SC2404-CD	(U)	C3
Q27	2SD601-QR	(Y)	C3
Q28	2SD601-QR	(Y)	C2
Q29	2SA1022-C	(E)	C3
Q30	2SC2404-CD	(U)	C3
Q31	2SC2404-CD	(U)	C3
Q32	2SC2404-CD	(U)	C3
Q33	2SD601-QR	(Y)	C2, C3
Q34	2SD601-QR	(Y)	C2
Q35	2SB709-Q	(A)	E2
Q36	2SD601-QR	(Y)	B2
Q37	2SD601-QR	(Y)	B2
Q38	2SD601-QR	(Y)	B2
Q39	2SD601-QR	(Y)	B2
Q40	2SD601-QR	(Y)	D2
Q41	2SD601-QR	(Y)	D2
Q42	2SD601-QR	(Y)	D2
Q43	2SD601-QR	(Y)	D2
Q44	2SD601-QR	(Y)	C2
Q45	2SB709-Q	(A)	C2
Q46	2SD601-QR	(Y)	C2
Q47	2SB709-Q	(A)	C2
D1	MA151K	(MH)	C3
D2	MA151K	(MH)	C3
D3	MA151K	(MH)	B3
D4	MA151K	(MH)	C3
D5	MA151K	(MH)	C3
D6	MA151K	(MH)	C3
D7	MA151K	(MH)	D2
D8	MA151K	(MH)	D2
Q1	2SB946-PQ		C6
D1	LN21RPH		C1
D2	YFLN31GCP		C1

POWER BOARD

IC1	NJM3524D	B6
Q2	2SC1384-QRS	B5
Q3	2SA684-QR	B5
D1	D5FB2052	B7
D2	ESAB82-004	C6
D4	RM4ZLFK1	A8

CONTROL BOARD

D1	MA165	D7
D2	MA165	D6
D3	MA165	D6

MN1551CVT

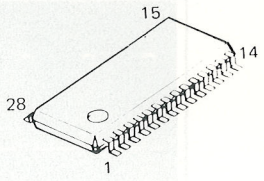

MN4053BS

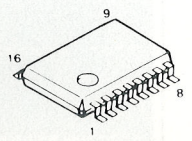

M5234FP

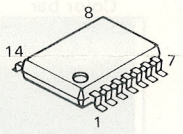

NJM386M
NJM3414M

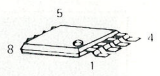

NJM3524D

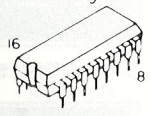

MN1280T

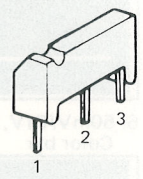

AN6541

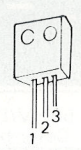

2SA1022-C
2SB709-Q
2SC2404-CD
2SD601-QR

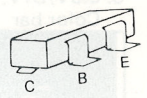

2SA684-QR
2SC1384-QRS

2SB946-PQ

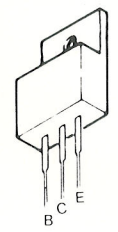

MA151K

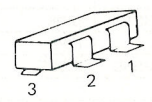

1 : NC
2 : Anode
3 : Cathode

MA165

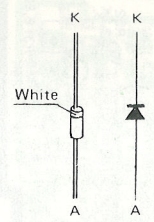

ESAB82-004

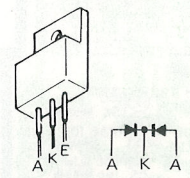

D5FB2052

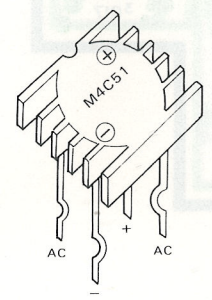

RM4ZLFK1

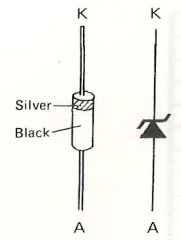

LN21RPH

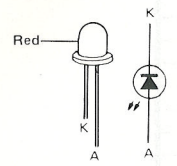

YFLN31GCP

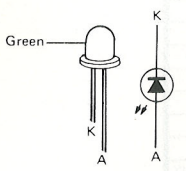

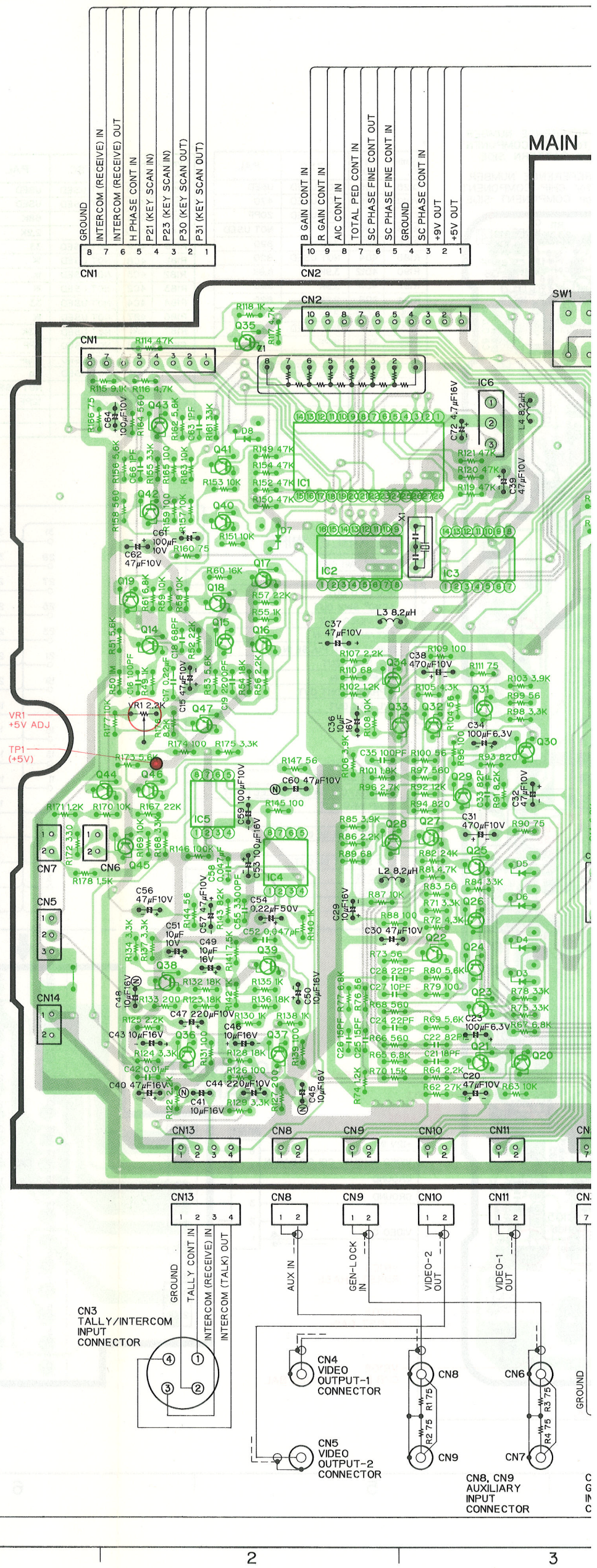

CONDUCTOR VIEW OF REMOTE CONTROL UNIT WV-RC35

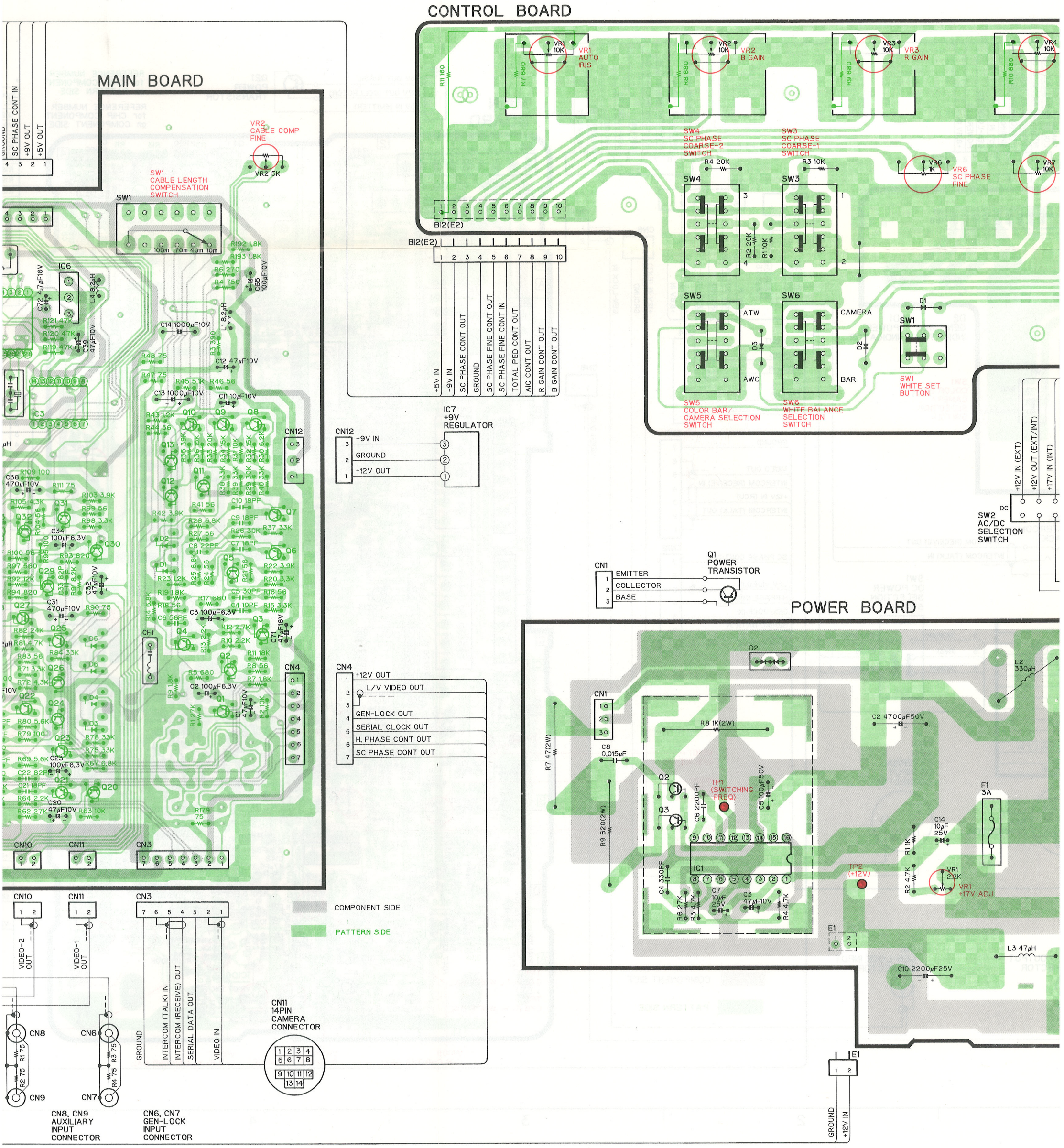

CONTROL BOARD

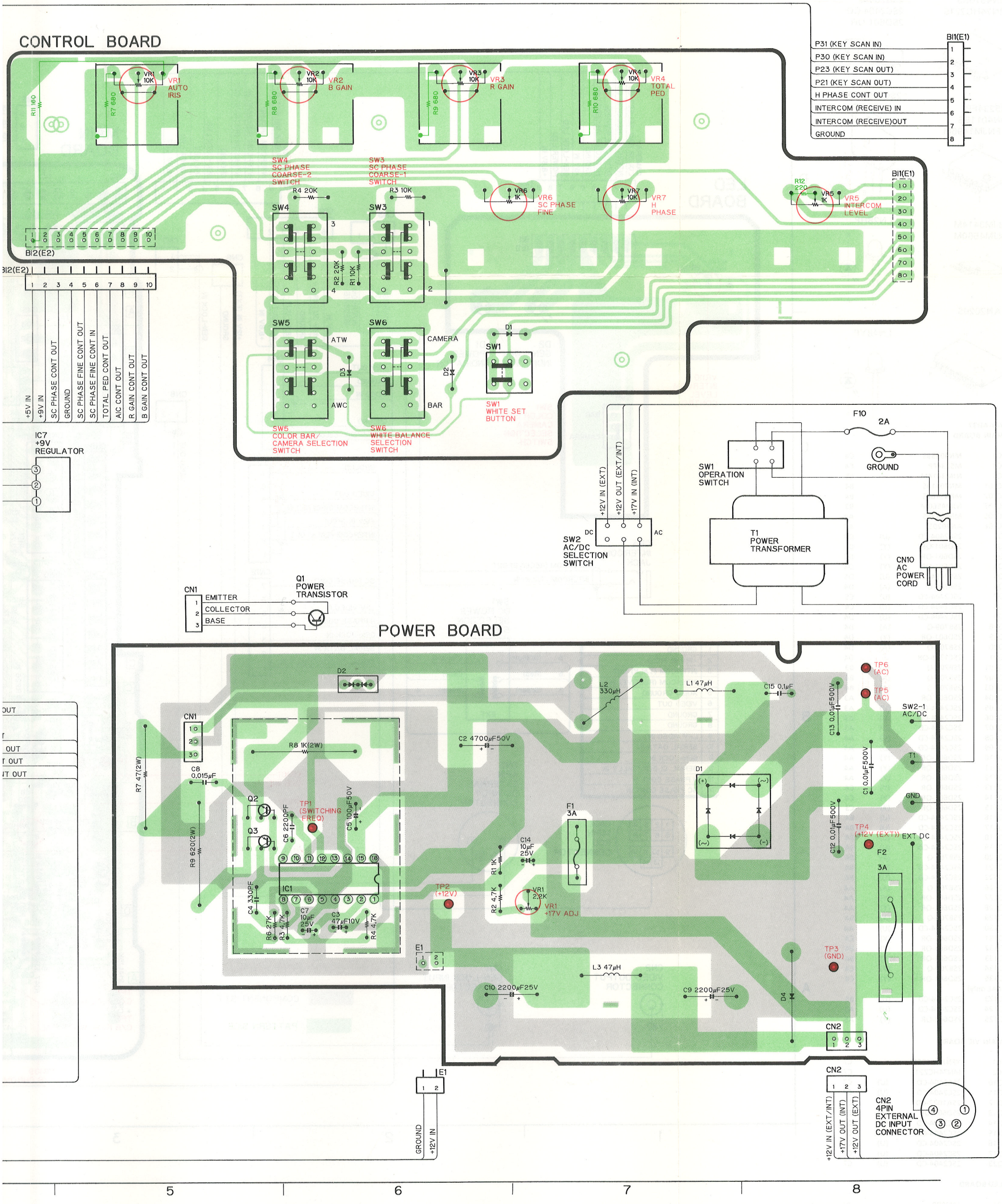

POWER BOARD

MN4053BS
MN4516BS
MN74HC221S

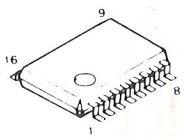

2SA1022-CD
2SB709-Q
2SC2404-CD
2SD601-QR

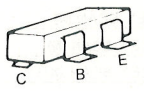

2SC1398-QR

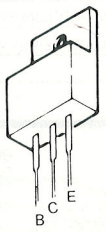

M5234FP
MN4011BS
YFNJM1496M

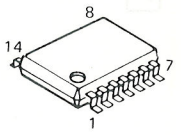

NJM3414M
NJM4560M

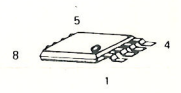

AN2020S

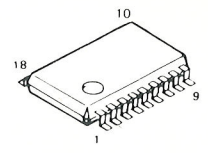

LN28RP

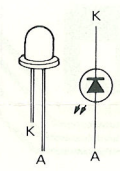

LN48YP

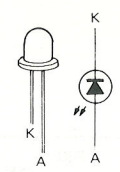

WV-AD37
MAIN BOARD

IC3	MN4053BS		C4
IC4	M5234FP		C4
IC5	NJM3414M		C5
IC101	MN4011BS		B4
IC102	MN4516BS		B4
IC103	NJM4560M		B3
IC105	MN4053BS		A4
IC106	AN2020S		A4
Q1	2SC2404-CD	(U)	D4
Q2	2SD601-QR	(Y)	D4
Q3	2SD601-QR	(Y)	D4
Q4	2SD601-QR	(Y)	D4
Q5	2SC2404-CD	(U)	D5
Q6	2SB709-Q	(A)	D4
Q7	2SC2404-CD	(U)	C5
Q8	2SC2404-CD	(U)	C4
Q9	2SC2404-CD	(U)	D4
Q18	2SB709-Q	(A)	D4
Q19	2SD601-QR	(Y)	D4
Q20	2SB709-Q	(A)	D4
Q21	2SC1398-QR		D4
Q101	2SB709-Q	(A)	B3
Q102	2SB709-Q	(A)	B4
Q103	2SB709-Q	(A)	B4
Q104	2SD601-QR		A3
Q105	2SC2404-CD	(U)	A3
Q106	2SC2404-CD	(U)	A3
Q107	2SC2404-CD	(U)	A3
Q108	2SC2404-CD	(U)	A4
Q109	2SC2404-CD	(U)	A4
Q110	2SD601-QR	(Y)	A4
Q111	2SD601-QR	(Y)	A4
Q112	2SD601-QR	(Y)	A4
Q113	2SD601-QR	(Y)	C4
Q114	2SD601-QR	(Y)	C4
Q115	2SD601-QR	(Y)	C3
Q116	2SC2404-CD	(U)	B4
Q117	2SC2404-CD	(U)	B4
Q118	2SC2404-CD	(U)	B4
Q119	2SC2404-CD	(U)	B4
Q120	2SB709-Q	(A)	B4
Q121	2SC2404-CD	(U)	B4
Q122	2SC2404-CD	(U)	B4
Q126	2SB709-Q	(A)	A4
Q127	2SD601-QR	(Y)	A4
Q128	2SD601-QR	(Y)	A4
Q129	2SB709-Q	(A)	B4
Q130	2SC2404-CD	)U)	A4
Q131	2SD601-QR	(Y)	C4
Q132	2SD601-QR	(Y)	B4
Q133	2SD601-QR	(Y)	B4
Q134	2SB709-Q	(A)	C4
Q135	2SD601-QR	(Y)	C4
(PAL only)			
Q123	2SC2404-CD	(U)	B5
Q124	2SC2404-CD	(U)	A5
Q125	2SD601-QR	(Y)	A5

MAIN VIC BOARD

IC1	YFNJM1496M		C7
IC2	MN74HC221S		C7
Q10	2SC2404-CD	(U)	C7
Q11	2SC2404-CD	(U)	C7
Q12	2SA1022-CD	(E)	C7
Q13	2SD601-QR	(Y)	C7
Q14	2SC2404-CD	(U)	C7
Q15	2SC2404-CD	(U)	C7
Q16	2SC2404-CD	(U)	C7
Q17	2SC2404-CD	(U)	C7
Q23	2SC2404-CD	(U)	C7

LED BOARD

D1	LN28RP	D2
D2	LN48YP	D2

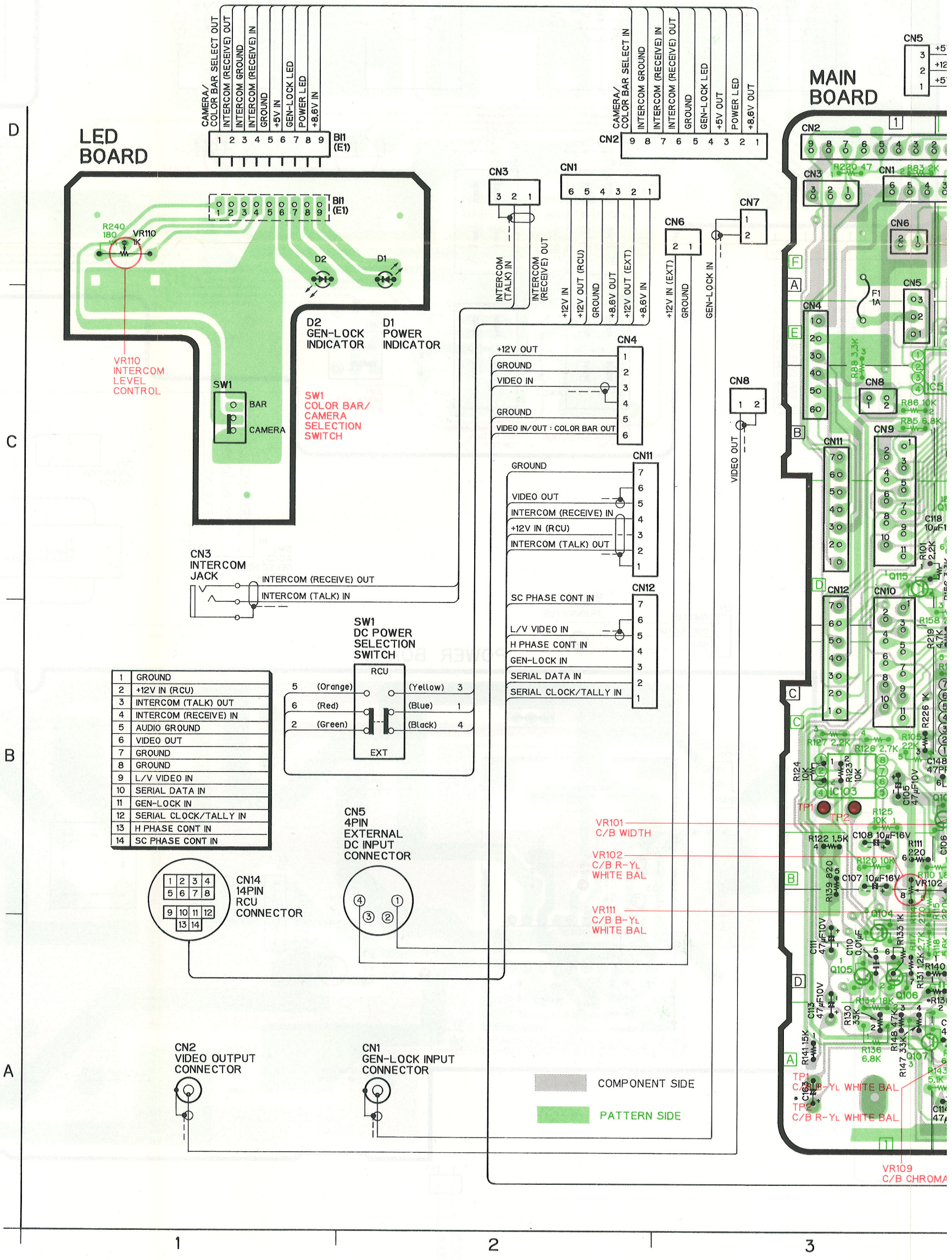

ONDUCTOR VIEW OF RCU ADAPTOR WV-AD37

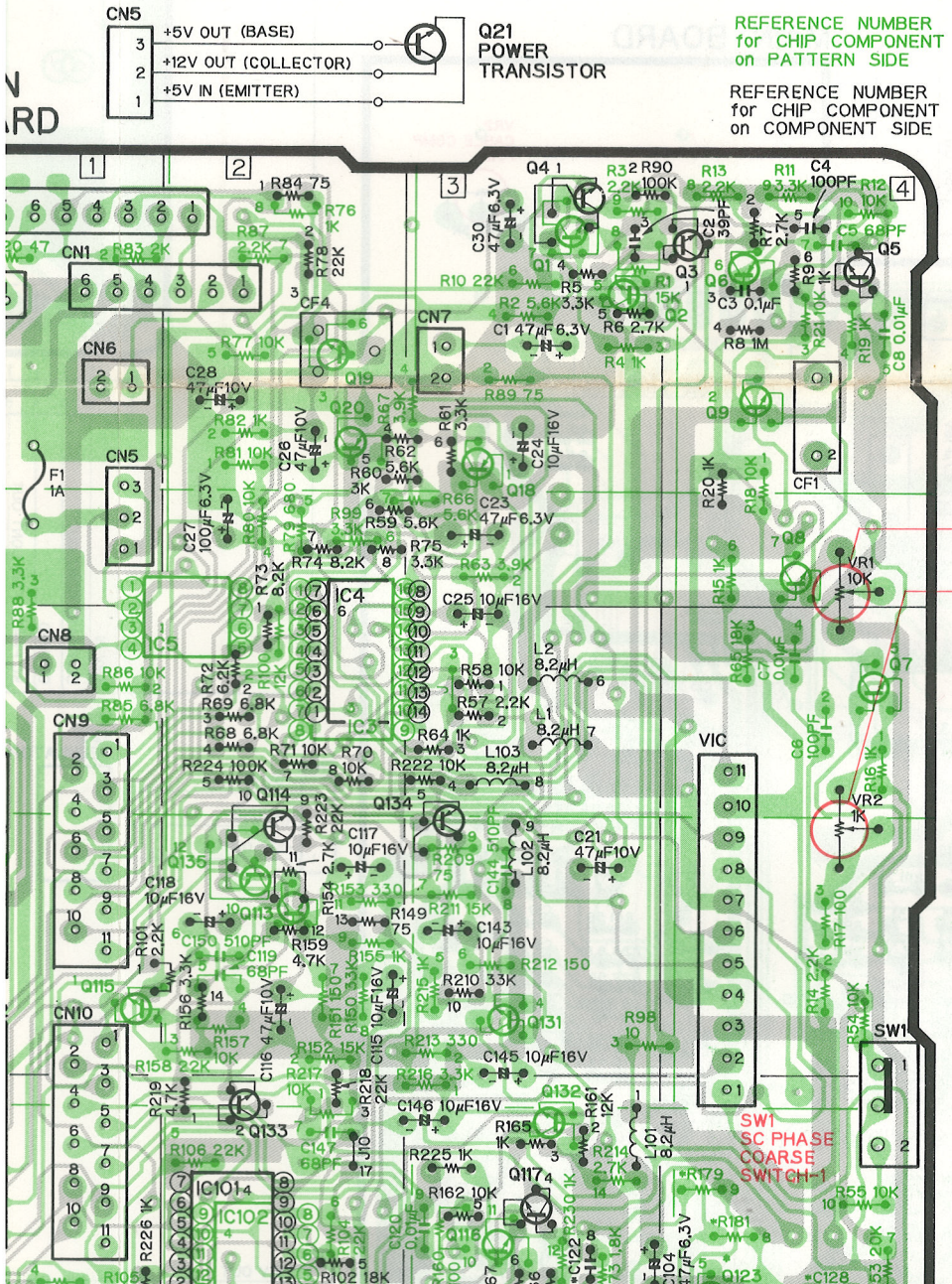

*

Symbol NO.	Ref. NO.	NTSC	PAL
Q125	4D5	NOT USED	USED
VR103	4D1	NOT USED	470
CT2		NOT USED	20PF
R138	2D2	47K	NOT USED
R166	3C7	750	820
R185	4D4	NOT USED	820
R190	4D12	3.9K	5.6K
R191	4D11	3.9K	390
R194	3D8	2.2K	820
R232	3C19	2.2K	0Ω
R238	2D9	NOT USED	24K
C122	3C8	15PF	5PF
C163		NOT USED	47μF10V
J11	3C18	NOT USED	0Ω
J12	4C3	0Ω	NOT USED

*

Symbol NO.	Ref. NO.	NTSC	PAL
Q123	4C5	NOT USED	USED
Q124	4B11	NOT USED	USED
R121	2B5	39K	68K
R168	3B12	0Ω	2.2K
R179	4C9	NOT USED	33
R181	4C8	NOT USED	1K
R182	4C3	NOT USED	1K
R183	4C2	NOT USED	1K
R184	4C4	NOT USED	33
R186	4B7	NOT USED	1K
R187	4A1	NOT USED	3.3K
C128	4C6	NOT USED	5PF
C129	4B2	NOT USED	0.1μF
J	3B5	NOT USED	0Ω
J	3B6	0Ω	NOT USED
C127	4B10	22PF	12PF

*

Symbol NO.	Ref. NO.	NTSC	PAL
R237	18	NOT USED	120K
C20	19	18PF	12PF
C162	1	NOT USED	120PF

*

Symbol NO.	Ref. NO.	NTSC	PAL
C10	8	33PF	27PF

FLEXIBLE WIRE

CN9

1	SC90° SW1 OUT
2	+8.6V IN
3	RCU INFO OUT
4	SC90° SW2 OUT
5	L/V VIDEO OUT
6	EXT/INT +LCH IN
7	BURST GATE PULSE IN
8	G/L SYNC OUT
9	TEMP INFO IN
10	H PHASE CONT OUT
11	G/L BSC OUT

CN10

1	SERIAL CLOCK/TALLY OUT
2	SERIAL DATA OUT
3	CAMERA/COLOR BAR SELECT OUT
4	TEMP INFO OUT
5	SC IN
6	H RESET PULSE IN
7	BFP IN
8	C/B SELECT IN/OUT
9	SYNC IN
10	BLK IN
11	NOT USED

BI1(E1)

6	+12V IN
5	VIDEO IN/OUT : COLOR BAR IN
4	GROUND
3	GROUND
2	VIDEO OUT
1	

32PIN CONNECTOR BOARD

BI1(E1)

6	
5	
4	
3	
2	
1	

CN2

1	
2	

CN1

32	NOT USED
31	+8.6V IN
30	GROUND (VIDEO)
29	NOT USED
28	VIDEO IN/OUT : COLOR BAR OUT
27	+12V OUT
26	H PHASE CONT OUT
25	GROUND
24	TEMP INFO IN
23	GROUND
22	SYNC IN
21	L/V VIDEO OUT
20	BFP IN
19	BLK IN
18	H RESET PULSE IN
17	SERIAL DATA OUT
16	G/L SYNC OUT
15	G/L BSC OUT
14	SC IN
13	BURST GATE PULSE IN
12	C/B SELECT IN/OUT
11	AUDIO GROUND
10	RCU INFO OUT
9	NOT USED
8	EXT/INT +LCH IN
7	NOT USED
6	SC90° SW1 OUT
5	VIDEO IN
4	SC90° SW2 OUT
3	SERIAL CLOCK/TALLY OUT
2	CAMERA/COLOR BAR SELECT OUT
1	TEMP INFO OUT

MAIN VIC BOARD

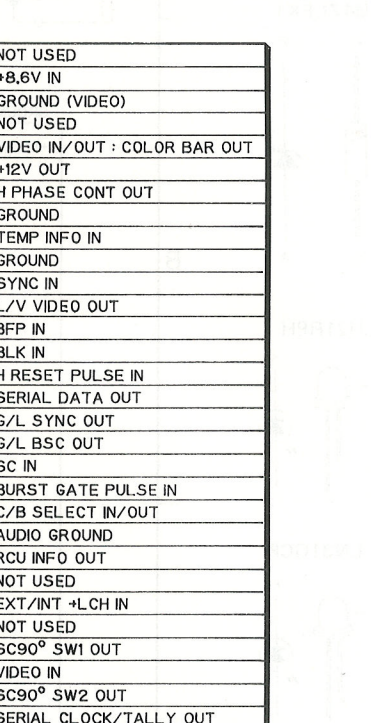

FERENCE NUMBER
r CHIP COMPONENT
PATTERN SIDE

FERENCE NUMBER
CHIP COMPONENT
COMPONENT SIDE

*

Symbol NO.	Ref. NO.	NTSC	PAL
Q125	4D5	NOT USED	USED
VR103	4D1	NOT USED	470
CT2		NOT USED	20PF
R138	2D2	47K	NOT USED
R166	3C7	750	820
R185	4D4	NOT USED	820
R190	4D12	3.9K	5.6K
R191	4D11	3.9K	390
R194	3D8	2.2K	820
R232	3C19	2.2K	0Ω
R238	2D9	NOT USED	24K
C122	3C8	15PF	5PF
C163		NOT USED	47μF10V
J11	3C18	NOT USED	0Ω
J12	4C3	0Ω	NOT USED

*

Symbol NO.	Ref. NO.	NTSC	PAL
Q123	4C5	NOT USED	USED
Q124	4B11	NOT USED	USED
R121	2B5	39K	68K
R168	3B12	0Ω	2.2K
R179	4C9	NOT USED	33
R181	4C8	NOT USED	1K
R182	4C3	NOT USED	1K
R183	4C2	NOT USED	1K
R184	4C4	NOT USED	33
R186	4B7	NOT USED	1K
R187	4A1	NOT USED	3.3K
C128	4C6	NOT USED	5PF
C129	4B2	NOT USED	0.1μF
J	3B5	NOT USED	0Ω
J	3B6	0Ω	NOT USED
C127	4B10	22PF	12PF

*

Symbol NO.	Ref. NO.	NTSC	PAL
R237	18	NOT USED	120K
C20	19	18PF	12PF
C162	1	NOT USED	120PF

*

Symbol NO.	Ref. NO.	NTSC	PAL
C10	8	33PF	27PF

MAIN VIC BOARD

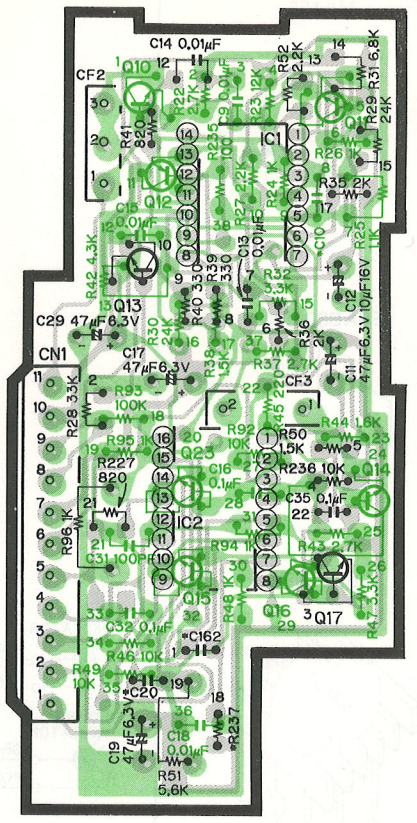

FLEXIBLE WIRE

CN9

1	SC90° SW1 OUT
2	+8.6V IN
3	RCU INFO OUT
4	SC90° SW2 OUT
5	L/V VIDEO OUT
6	EXT/INT +LCH IN
7	BURST GATE PULSE IN
8	G/L SYNC OUT
9	TEMP INFO IN
10	H PHASE CONT OUT
11	G/L BSC OUT

CN10

1	SERIAL CLOCK/TALLY OUT
2	SERIAL DATA OUT
3	CAMERA/COLOR BAR SELECT OUT
4	TEMP INFO OUT
5	SC IN
6	H RESET PULSE IN
7	BFP IN
8	C/B SELECT IN/OUT
9	SYNC IN
10	BLK IN
11	NOT USED

VR1 H PHASE

VR2 SC PHASE FINE

CT2 SC 270° PHASE

SW2 SC PHASE COARSE SWITCH-2

CT1 SC 90° PHASE

JA=PAL only

VR103 SCR BALANCE

VR104 BURST PHASE

VR105 BURST GAIN

VR106 C/B B-Y$_L$ CARRIER BAL

32PIN CONNECTOR BOARD

BI1(E1)

6	+12V IN
5	VIDEO IN/OUT : COLOR BAR IN
4	GROUND
3	GROUND
2	
1	VIDEO OUT

CN1

CN2

32	NOT USED
31	+8.6V IN
30	GROUND (VIDEO)
29	NOT USED
28	VIDEO IN/OUT : COLOR BAR OUT
27	+12V OUT
26	H PHASE CONT OUT
25	GROUND
24	TEMP INFO IN
23	GROUND
22	SYNC IN
21	L/V VIDEO OUT
20	BFP IN
19	BLK IN
18	H RESET PULSE IN
17	SERIAL DATA OUT
16	G/L SYNC OUT
15	G/L BSC OUT
14	SC IN
13	BURST GATE PULSE IN
12	C/B SELECT IN/OUT
11	AUDIO GROUND
10	RCU INFO OUT
9	NOT USED
8	EXT/INT +LCH IN
7	NOT USED
6	SC90° SW1 OUT
5	VIDEO IN
4	SC90° SW2 OUT
3	SERIAL CLOCK/TALLY OUT
2	CAMERA/COLOR BAR SELECT OUT
1	TEMP INFO OUT

1. 1V/DIV, 20μs/DIV

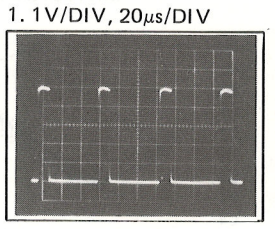

11. 0.2V/DIV, 0.2μs/DIV

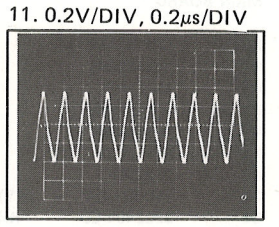

2. 1V/DIV, 10μs/DIV

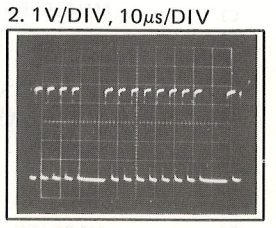

12. 1V/DIV, 20μs/DIV

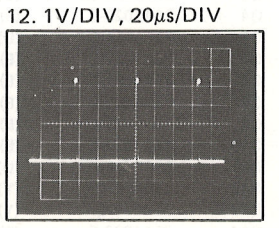

3. 1V/DIV, 20μs/DIV
Color bar

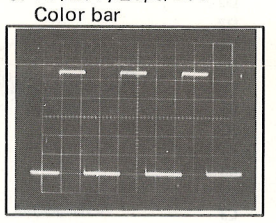

13. 0.1V/DIV, 20μs/DIV

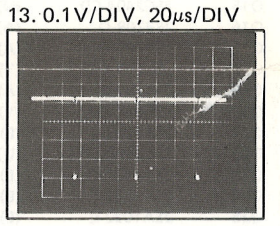

4. 0.1V/DIV, 10μs/DIV
Color bar

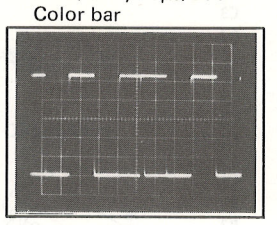

14. 0.1V/DIV, 20μs/DIV
Color bar

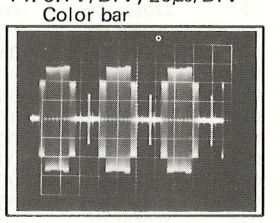

5. 0.1V/DIV, 5μs/DIV
Color bar

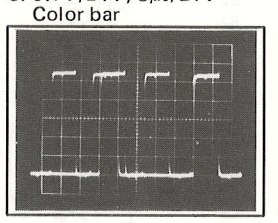

15. 0.1V/DIV, 20μs/DIV

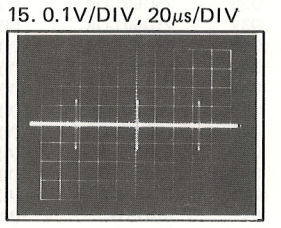

6. 50mV/DIV, 5μs/DIV
Color bar

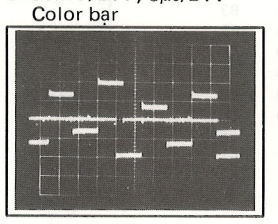

16. 0.2μs/DIV, 10μs/DIV
Gen-lock(Color bar)

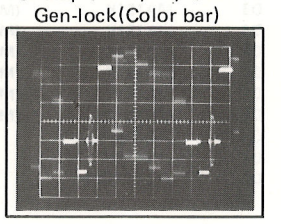

7. 50mV/DIV, 10μs/DIV
Color bar

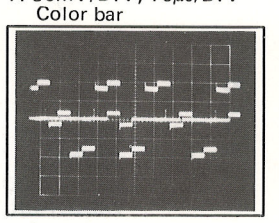

17. 1V/DIV, 10μs/DIV
Gen-lock(Color bar)

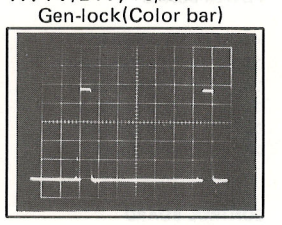

8. 0.5V/DIV, 10μs/DIV
Color bar

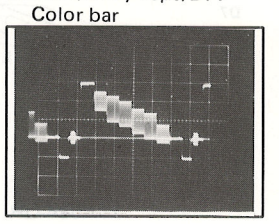

18. 0.1V/DIV, 10μs/DIV
Gen-lock(Color bar)

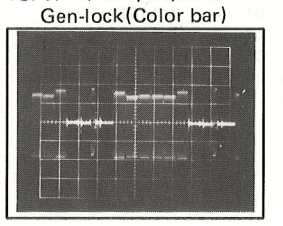

9. 0.5V/DIV, 10μs/DIV
Color bar

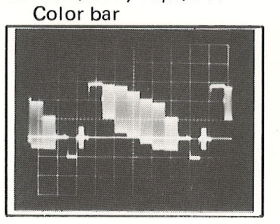

19. 1V/DIV, 10μs/DIV
Gen-lock(Color bar)

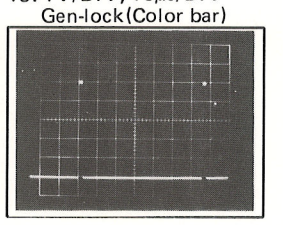

10. 0.5V/DIV, 10μs/DIV

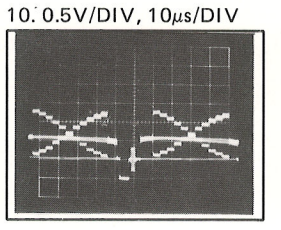

20. 0.5V/DIV, 10μs/DIV
Gen-lock(Color bar)

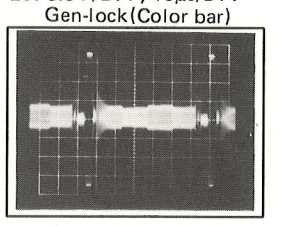

5 6 7

SCHEMATIC DIAGRAM OF RCU ADAPTOR WV-AD37

WV-AD37
MAIN BOARD

IC3	MN4053BS		D4
IC4	M5234FP		D4, D5
IC5	NJM3414M		B2, B3
IC101	MN4011BS		B4
IC102	MN4516BS		B5
IC103	NJM4560M		B6
IC105	MN4053BS		A5
IC106	AN2020S		A7
Q1	2SC2404-CD	(U)	C2
Q2	2SD601-QR	(Y)	C2
Q3	2SD601-QR	(Y)	C3
Q4	2SD601-QR	(Y)	C3
Q5	2SC2404-CD	(U)	C3
Q6	2SB709-Q	(A)	C3
Q7	2SC2404-CD	(U)	C3
Q8	2SC2404-CD	(U)	C4
Q9	2SC2404-CD	(U)	C4
Q18	2SB709-Q	(A)	D3
Q19	2SD601-QR	(Y)	D2
Q20	2SB709-Q	(A)	D3
Q21	2SC1398-QR		B1
Q101	2SB709-Q	(A)	B5
Q102	2SB709-Q	(A)	B5
Q103	2SB709-Q	(A)	B5
Q104	2SD601-QR		B6
Q105	2SC2404-CD	(U)	B7
Q106	2SC2404-CD	(U)	B7
Q107	2SC2404-CD	(U)	B7
Q108	2SC2404-CD	(U)	B7
Q109	2SC2404-CD	(U)	B7
Q110	2SD601-QR	(Y)	B8
Q111	2SD601-QR	(Y)	B8
Q112	2SD601-QR	(Y)	B8
Q113	2SD601-QR	(Y)	D7
Q114	2SD601-QR	(Y)	D7
Q115	2SD601-QR	(Y)	D7
Q116	2SC2404-CD	(U)	A2
Q117	2SC2404-CD	(U)	A3
Q118	2SC2404-CD	(U)	A3
Q119	2SC2404-CD	(U)	A3
Q120	2SB709-Q	(A)	A3
Q121	2SC2404-CD	(U)	A3
Q122	2SC2404-CD	(U)	A4
Q126	2SB709-Q	(A)	A6
Q127	2SD601-QR	(Y)	A5
Q128	2SD601-QR	(Y)	A5
Q129	2SB709-Q	(A)	A6
Q130	2SC2404-CD	)U)	A7
Q131	2SD601-QR	(Y)	D6
Q132	2SD601-QR	(Y)	D6
Q133	2SD601-QR	(Y)	D6
Q134	2SB709-Q	(A)	D5
Q135	2SD601-QR	(Y)	D5
(PAL only)			
Q123	2SC2404-CD	(U)	A4
Q124	2SC2404-CD	(U)	A4
Q125	2SD601-QR	(Y)	A4

MAIN VIC BOARD

IC1	YFNJM1496M		C7
IC2	MN74HC221S		C6
Q10	2SC2404-CD	(U)	C4
Q11	2SC2404-CD	(U)	C5
Q12	2SA1022-CD	(E)	C5
Q13	2SD601-QR	(Y)	C4
Q14	2SC2404-CD	(U)	C5
Q15	2SC2404-CD	(U)	C6
Q16	2SC2404-CD	(U)	C6
Q17	2SC2404-CD	(U)	C6
Q23	2SC2404-CD	(U)	C5

LED BOARD

D1	LN28RP	E1
D2	LN48YP	E1

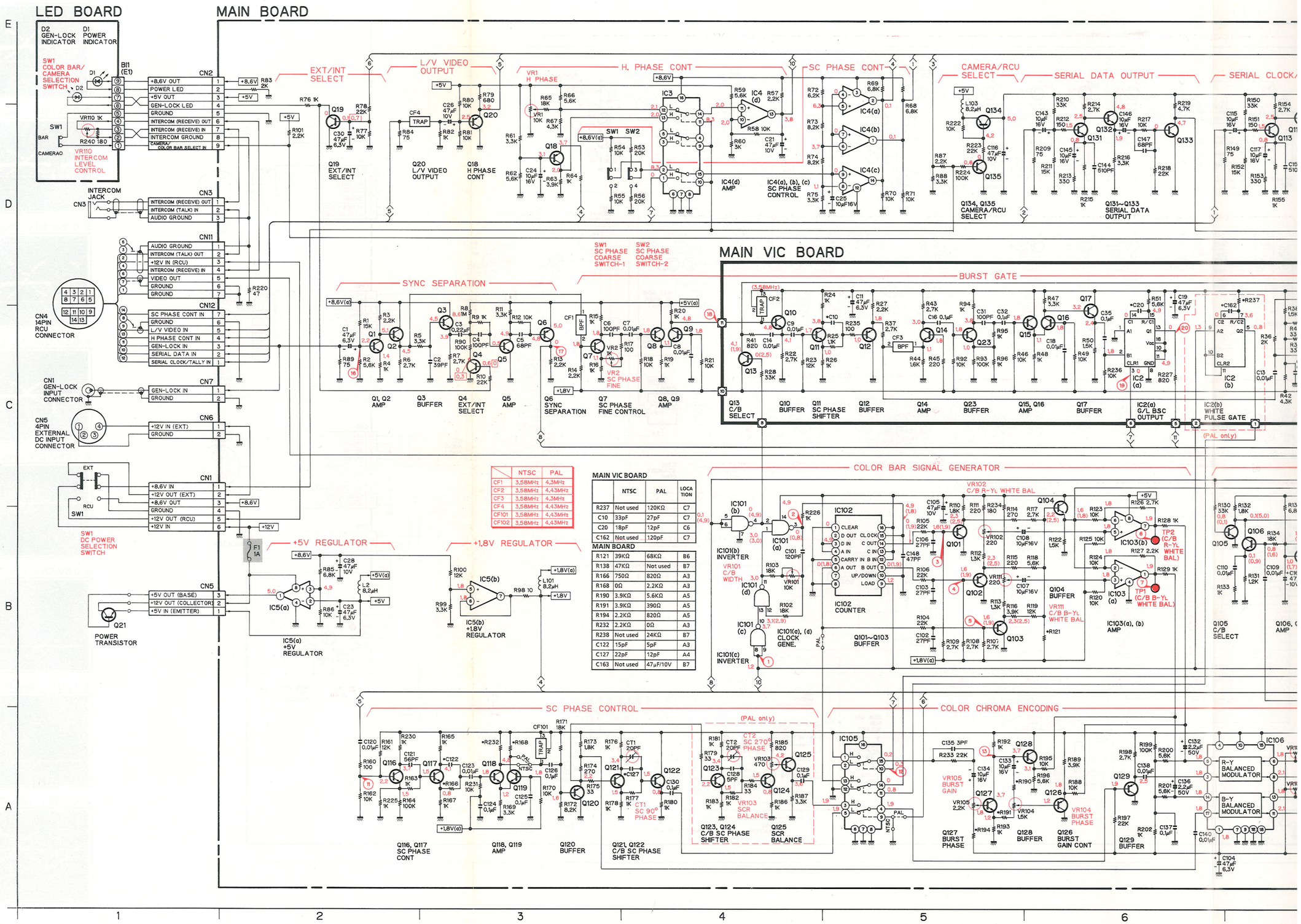

SCHEMATIC DIAGRAM OF RCU ADAPTOR WV-AD37

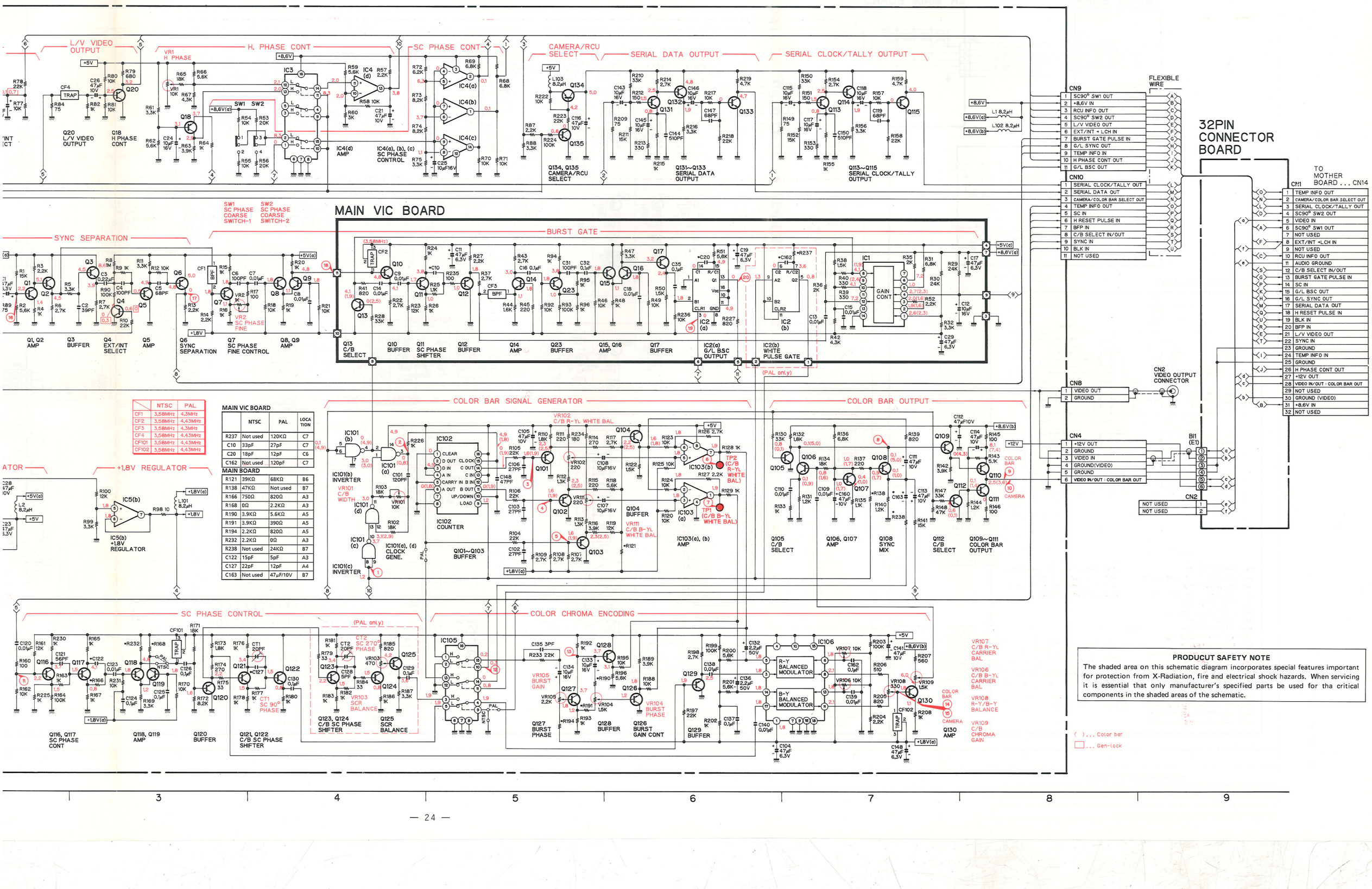

	NTSC	PAL
CF1	3.58MHz	4.43MHz
CF2	3.58MHz	4.43MHz
CF3	3.58MHz	4.43MHz
CF4	3.58MHz	4.43MHz
CF101	3.58MHz	4.43MHz
CF102	3.58MHz	4.43MHz

MAIN VIC BOARD

	NTSC	PAL	LOCATION
R237	Not used	120KΩ	C7
C10	33pF	27pF	C7
C20	18pF	12pF	C6
C162	Not used	120pF	C7

MAIN BOARD

R121	39KΩ	68KΩ	B6
R138	47KΩ	Not used	B7
R166	750Ω	820Ω	A3
R168	0Ω	2.2KΩ	A3
R190	3.9KΩ	5.6KΩ	A5
R191	3.9KΩ	390Ω	A5
R194	2.2KΩ	820Ω	A5
R232	2.2KΩ	0Ω	A3
R238	Not used	24KΩ	B7
C122	15pF	5pF	A3
C127	22pF	12pF	A4
C163	Not used	47μF/10V	B7

PRODUCUT SAFETY NOTE

The shaded area on this schematic diagram incorporates special features important for protection from X-Radiation, fire and electrical shock hazards. When servicing it is essential that only manufacturer's specified parts be used for tha critical components in the shaded areas of the schematic.

( )... Color bar

□... Gen-lock

SCHEMATIC DIAGRAM OF CAMERA REMOTE CONTROLLER WV-CR12

SWITCH BOARD

CR MAIN BOARD

CR SUB BOARD

CONTROL BOARD

CABLE COMPENSATION

VIDEO OUTPUT

AF AREA DETECT CIRCUIT

VP SEPARATION

MICROPROCESSOR CIRCUIT

Q4~Q6 AMP

Q7~Q13 FREQUENCY RESPONSE CORRECTION

Q15, Q17, Q18 VIDEO AMP

Q14, Q16 PLAYBACK CONT

Q19, Q20, Q66 PLAYBACK DETECT

Q21 BUFFER

Q22 AMP

Q23~Q25 BUFFER

Q26~QQ28 AMP

Q29~Q32 FREQUENCY RESPONSE CORRECTION

Q33 PLAYBACK CONT

Q34, Q35 BUFFER

Q45 AMP

Q46 BUFFER

Q47, Q48 EVF CHARACTER DETECT

Q49, Q50 AF AREA DETECT

Q51 SERIAL CLOCK OUTPUT

Q52 SERIAL DATA OUTPUT

Q67, Q68 STANDBY CONT

Q36 BUFFER

Q37~Q41 FREQUENCY RESPONSE CORRECTION

Q42, Q43 AMP

Q44, Q65 VP SEPARATION

IC1(b) PLAYBACK CONT

IC1(a) STANDBY CONT

IC5 AUDIO AMP

Q53 VP INPUT

Q54 PLAYBACK CONT

IC2 MICROPROCESSOR

IC3(a) R GAIN A/D

IC3(b) NOT USED

IC3(c) B GAIN A/D

IC3(d) IRIS A/D

IC1(c) IRIS SELECT

IC4 RESET PULSE GENERATOR

IC6 MICRO-PROCESSOR

Q58, Q61 RUN SELECT

Q59 NOT USED

Q57 PLAYBACK CONT

Q60 REC CONT

Q62 BUFFER

Q64 TALLY CANCEL

Q63 BUFFER

SW1 VTR COMPATIBILITY SWITCH

SW1 = WHITE SET BUTTON

SW2 = ZONE SELECTION/AUTO FOCUS BUTTON

SW3 = REC REVIEW BUTTON

SW4 = TILT (DOWN)/FOCUS (FAR) BUTTON

SW5 = TITLE/SEQ. BUTTON

SW6 = DATE/TIME · SHIFT BUTTON

SW7 = NEG/POS BUTTON

SW8 = LAPSE TIME BUTTON

SW9 = VTR START/PAUSE BUTTON

SW10 = FADE IN/OUT BUTTON

SW11 = PAN (RIGHT)/ZOOM (WIDE) BUTTON

SW12 = TILT (UP)/FOCUS (NEAR) BUTTON

SW13 = PAN (LEFT)/ZOOM (TELE) BUTTON

SW14 = SET BUTTON

SW15 = OPERATION SWITCH

SW16 = LOCK SWITCH

SW17 = PAN/TILT LENS SELECTION SWITCH

SW18 = ZOOM SPEED SELECTION SWITCH

SW19 = FOCUS SPEED SELECTION SWITCH

SW20 = WHITE BALANCE SELECTION SWITCH

SW21 = FOCUS SELECTION SWITCH

SW22 = AUTO FOCUS ZONE ON/OFF SWITCH

SW23 = LAPSE RECORDING SWITCH

D24 POWER INDICATOR

VR3 AUTO IRIS

VR2 B GAIN

VR1 R GAIN

CT1 TIMER FREQ ADJ

PRODUCUT SAFETY NOTE

The shaded area on this schematic diagram incorporates special features important for protection from X-Radiation, fire and electrical shock hazards. When servicing it is essential that only manufacturer's specified parts be used for tha critical components in the shaded areas of the schematic.

SCHEMATIC DIAGRAM OF CAMERA REMOTE CONTROLLER WV-CR12

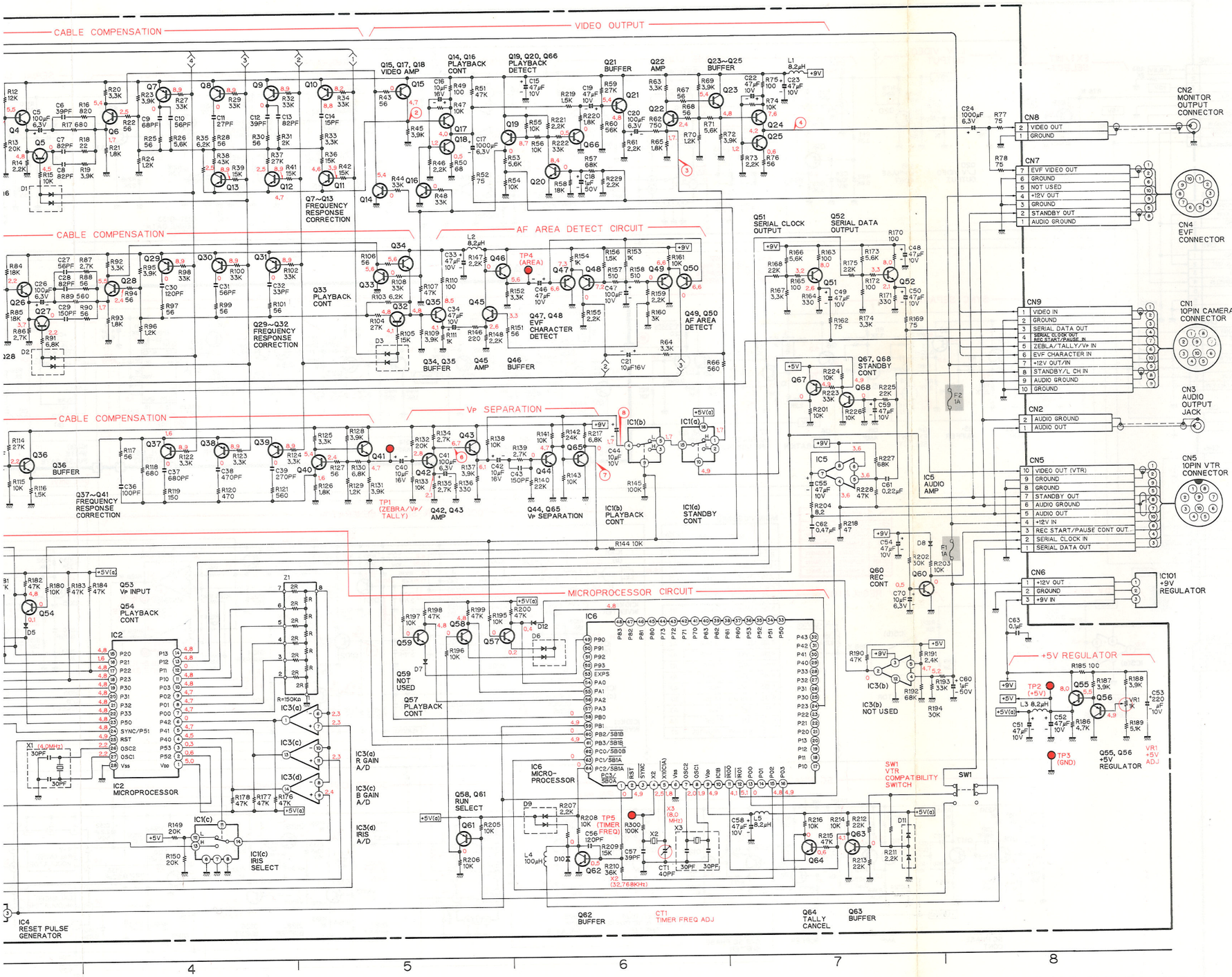

1. 0.2V/DIV, 10μs/DIV

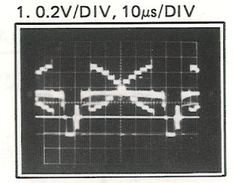

2. 0.5V/DIV, 10μs/DIV

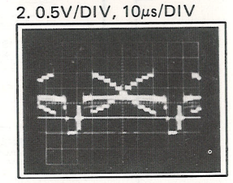

3. 0.05V/DIV, 10μs/DIV

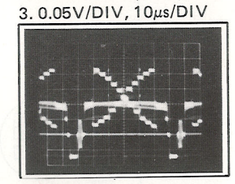

4. 0.5V/DIV, 10μ/DIV

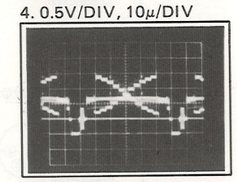

5. 0.05V/DIV, 5ms/DIV

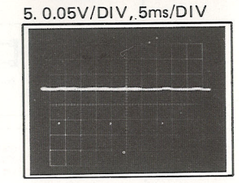

6. 0.5V/DIV, 5ms/DIV

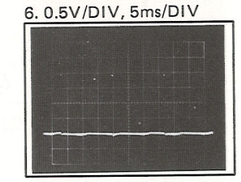

7. 1V/DIV, 5ms/DIV

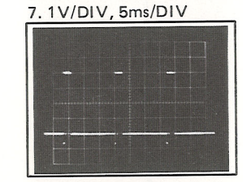

0.05V/DIV, 10μs/DIV

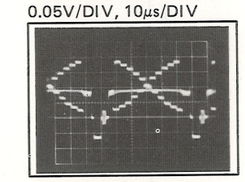

WV-CR12

IC101	AN6541		B8

MAIN BOARD

IC1	MN4053BS		A4
IC2	MN1551CVT2		B4
IC3	M5234FP		B5, A5, B7
IC4	MN1280T		A3
IC5	NJM3414M		C7
IC6	MN1754CVS2		B6
Q4	2SD601-QR	(Y)	D3
Q5	2SA1022-C	(E)	D3
Q6	2SC2404-CD	(U)	D4
Q7	2SA1022-C	(E)	E4
Q8	2SA1022-C	(E)	E4
Q9	2SA1022-C	(E)	E4
Q10	2SA1022-C	(E)	E5
Q11	2SA1022-C	(E)	D5
Q12	2SA1022-C	(E)	D4
Q13	2SA1022-C	(E)	D4
Q14	2SC2404-CD	(U)	D5
Q15	2SC2404-CD	(U)	E5
Q16	2SD601-QR	(Y)	D5
Q17	2SD601-QR	(Y)	D5
Q18	2SD601-QR	(Y)	D5
Q19	2SB709-Q	(A)	D6
Q20	2SD601-QR	(Y)	D6
Q21	2SD601-QR	(Y)	D6
Q22	2SC2404-CD	(U)	D6
Q23	2SD601-QR	(Y)	D7
Q24	2SD601-QR	(Y)	D7
Q25	2SD601-QR	(Y)	D7
Q26	2SD601-QR	(Y)	D3
Q27	2SA1022-C	(E)	C3
Q28	2SC2404-CD	(U)	D4
Q29	2SD601-QR	(Y)	D4
Q30	2SD601-QR	(Y)	D4
Q31	2SD601-QR	(Y)	D4
Q32	2SD601-QR	(Y)	C5
Q33	2SC2404-CD	(U)	D5
Q34	2SC2404-CD	(U)	D5
Q35	2SD601-QR	(Y)	C5
Q36	2SD601-QR	(Y)	C3
Q37	2SD601-QR	(Y)	C4
Q38	2SD601-QR	(Y)	C4
Q39	2SD601-QR	(Y)	C4
Q40	2SC2404-CD	(U)	C5
Q41	2SD601-QR	(Y)	C5
Q42	2SC2404-CD	(U)	C5
Q43	2SD601-QR	(Y)	C5
Q44	2SC2404-CD	(U)	C6
Q45	2SC2404-CD	(U)	C5
Q46	2SD601-QR	(Y)	D6
Q47	2SA1022-C	(E)	D6
Q48	2SA1022-C	(E)	D6
Q49	2SA1022-C	(E)	D6
Q50	2SA1022-C	(E)	D6
Q51	2SD601-QR	(Y)	D7
Q52	2SD601-QR	(Y)	D7
Q53	2SD601-QR	(Y)	B3
Q54	2SD601-QR	(Y)	B3
Q55	2SD601-QR	(Y)	B8
Q56	2SB709-Q	(A)	B8
Q57	2SD601-QR	(Y)	B6
Q58	2SD601-QR	(Y)	B5
Q59	2SD601-QR	(Y)	B5
Q60	2SD601-QR	(Y)	A7
Q61	2SB709-Q	(A)	A5
Q62	2SD601-QR	(Y)	A6
Q63	2SD601-QR	(Y)	A7
Q64	2SD601-QR	(Y)	A7
Q65	2SB709-Q	(A)	C6
Q66	2SD601-QR	(Y)	D6
Q67	2SB709-Q	(A)	C7
Q68	2SD601-QR	(Y)	C7
D1	MA151WA	(MN)	D3
D2	MA151WA	(MN)	C3
D3	MA151WA	(MN)	C5
D4	MA151K	(MH)	B3
D5	MA151K	(MH)	B3
D6	MA151WK	(MT)	B6
D7	MA151K	(MH)	B5
D8	MA151K	(MH)	B7
D9	MA153	(MC)	A6
D10	MA151K	(MH)	A6
D11	MA153	(MC)	A7
D12	MA151K	(MH)	B6

CONDUCTOR VIEW OF CAMERA I

MN1551CVT2

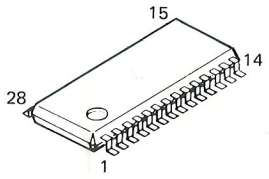

MN4053BS
MN4538BS

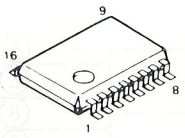

M5234FP

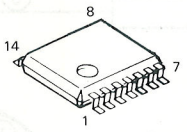

MN1754CVS2

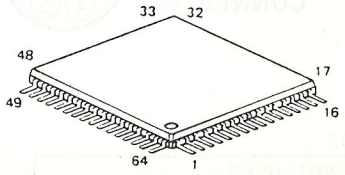

NJM3414M

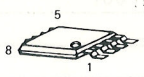

MN1280T

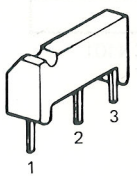

MA151WK

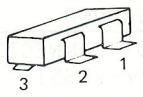

1 : Anode
2 Anode
3: Cathode

AN6541

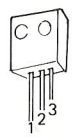

MA153

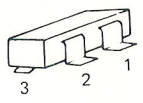

1: Cathode
2: Anode
3: Common

2SA1022-C
2SB709-Q
2SC2404-CD
2SD601-QR

MA165

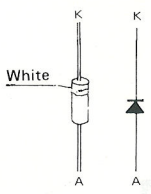

MA151WA

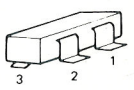

1 : Cathode
2 : Cathode
3 : Anode

LN29RD

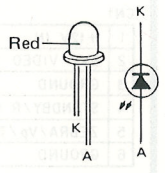

MA151K

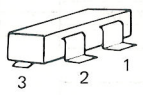

1: NC
2: Anode
3 Cathode

For SCHEMATIC DIAGRAM

CONTROL BOARD

D1	MA165		B1
D2	MA165		B1
D3	MA165		B1
D4	MA165		C1
D5	MA165		B1
D6	MA165		B1
D7	MA165		C1
D8	MA165		B1
D9	MA165		C1
D10	MA165		C2
D11	MA165		B1
D12	MA165		C1
D13	MA165		B2
D14	MA165		B1
D15	MA165		C1
D16	MA165		C2
D17	MA165		B2
D18	MA165		B2
D19	MA165		C1
D20	MA165		B1
D21	MA165		C2
D22	MA165		C1
D23	MA165		C1
D24	LN29RD		A1

CR SUB BOARD

IC1	YFMN4538BS		D1
Q1	2SD601-QR	(Y)	D2
Q2	2SD601-QR	(Y)	D2

WV-CR12

IC101	AN6541		A1

MAIN BOARD

IC1	MN4053BS		C5
IC2	MN1551CVT3S		C2
IC3	M5234FP		B2
IC4	MN1280T		C2
IC5	NJM3414M		B1
IC6	MN1754CVS2		C2
Q4	2SD601-QR	(Y)	B3
Q5	2SA1022-C	(E)	B3
Q6	2SC2404-CD	(U)	B3
Q7	2SA1022-C	(E)	B3
Q8	2SA1022-C	(E)	B3
Q9	2SA1022-C	(E)	B3
Q10	2SA1022-C	(E)	B4
Q11	2SA1022-C	(E)	B4
Q12	2SA1022-C	(E)	B4
Q13	2SA1022-C	(E)	B4
Q14	2SC2404-CD	(U)	B4
Q15	2SC2404-CD	(U)	B4
Q16	2SD601-QR	(Y)	B4
Q17	2SD601-QR	(Y)	B5
Q18	2SD601-QR	(Y)	B4
Q19	2SB709-Q	(A)	B5
Q20	2SD601-QR	(Y)	B5
Q21	2SD601-QR	(Y)	B5
Q22	2SC2404-CD	(U)	B5
Q23	2SD601-QR	(Y)	B5
Q24	2SD601-QR	(Y)	B6
Q25	2SD601-QR	(Y)	B6
Q26	2SD601-QR	(Y)	B5
Q27	2SA1022-C	(E)	B5
Q28	2SC2404-CD	(U)	B5
Q29	2SD601-QR	(Y)	B5
Q30	2SD601-QR	(Y)	B5
Q31	2SD601-QR	(Y)	B6
Q32	2SD601-QR	(Y)	B6
Q33	2SC2404-CD	(U)	B6
Q34	2SC2404-CD	(U)	B6
Q35	2SD601-QR	(Y)	B6
Q36	2SD601-QR	(Y)	B3
Q37	2SD601-QR	(Y)	C4
Q38	2SD601-QR	(Y)	C4
Q39	2SD601-QR	(Y)	C4
Q40	2SC2404-CD	(U)	C4
Q41	2SD601-QR	(Y)	B4
Q42	2SC2404-CD	(U)	C4
Q43	2SD601-QR	(Y)	B4
Q44	2SC2404-CD	(U)	C5
Q45	2SC2404-CD	(U)	C5
Q46	2SD601-QR	(Y)	C6
Q47	2SA1022-C	(E)	C6
Q48	2SA1022-C	(E)	C6
Q49	2SA1022-C	(E)	C6
Q50	2SA1022-C	(E)	C6
Q51	2SD601-QR	(Y)	C3
Q52	2SD601-QR	(Y)	B3
Q53	2SD601-QR	(Y)	C3
Q54	2SD601-QR	(Y)	C3
Q55	2SD601-QR	(Y)	B1
Q56	2SB709-Q	(A)	B1
Q57	2SD601-QR	(Y)	C2
Q58	2SD601-QR	(Y)	C1
Q59	2SD601-QR	(Y)	B2
Q60	2SD601-QR	(Y)	B1
Q61	2SB709-Q	(A)	B1
Q62	2SD601-QR	(Y)	C1
Q63	2SD601-QR	(Y)	C1
Q64	2SD601-QR	(Y)	C1
Q65	2SB709-Q	(A)	C5
Q66	2SD601-QR	(Y)	B4
Q67	2SB709-Q	(A)	B1
Q68	2SD601-QR	(Y)	B2
D1	MA151WA	(MN)	B3
D2	MA151WA	(MN)	C5
D3	MA151WA	(MN)	B6
D4	MA151K	(MH)	C2
D5	MA151K	(MH)	C3
D6	MA151WK	(MT)	C2
D7	MA151K	(MH)	C2
D8	MA151K	(MH)	B1
D9	MA153	(MC)	B1
D10	MA151K	(MH)	B1
D11	MA153	(MC)	B1
D12	MA151K	(MH)	C2

CONTROL BOARD

D1	MA165		E6
D2	MA165		E6
D3	MA165		E5
D4	MA165		E5
D5	MA165		E4
D6	MA165		E5
D7	MA165		E5
D8	MA165		E4
D9	MA165		E4
D10	MA165		E4
D11	MA165		E4
D12	MA165		E4
D13	MA165		E3
D14	MA165		E3
D15	MA165		F3
D16	MA165		E2
D17	MA165		E3
D18	MA165		E2
D19	MA165		E3
D20	MA165		E3
D21	MA165		D2
D22	MA165		D2
D23	MA165		D2
D24	LN29RD		F6

CR SUB BOARD

IC1	YFMN4538BS		B7
Q1	2SD601-QR	(Y)	C7
Q2	2SD601-QR	(Y)	C7

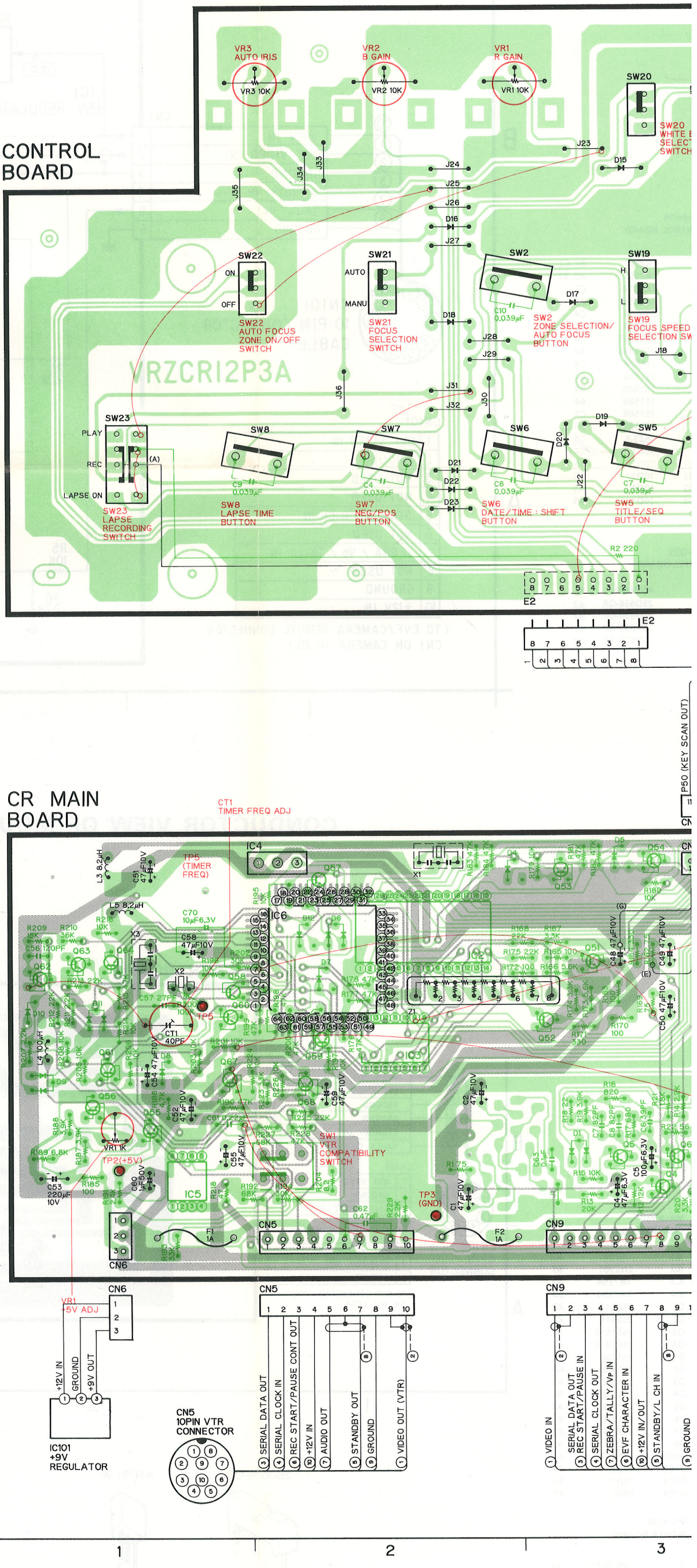

ERA REMOTE CONTROLLER WV-CR12

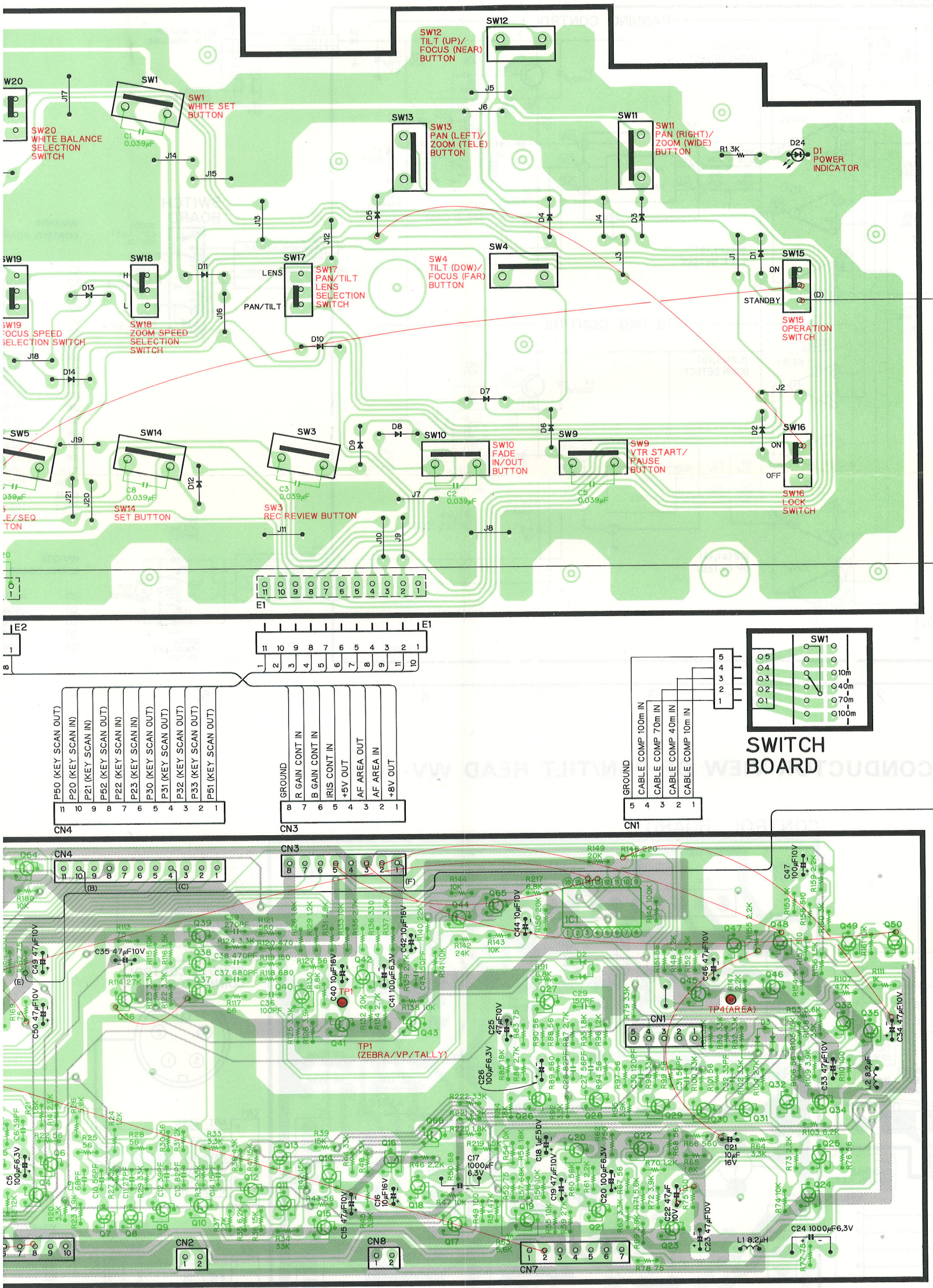

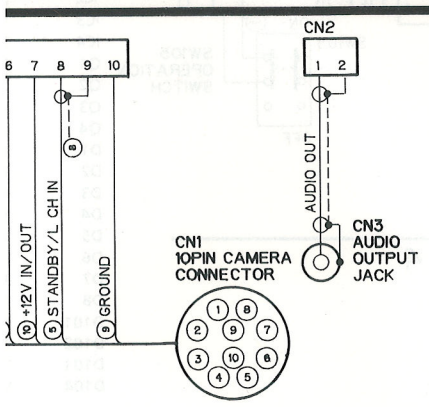

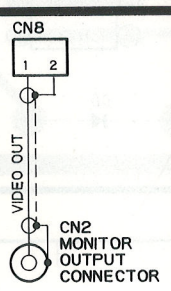

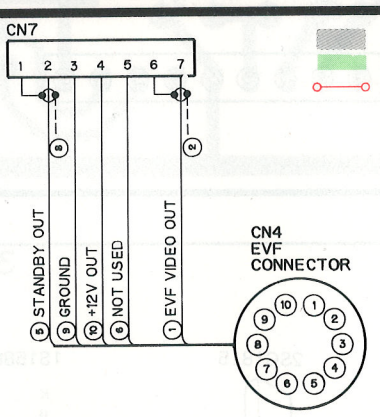

COMPONENT SIDE
PATTERN SIDE
PATTERN SIDE JUMPER

3 4 5 6 7

SCHEMATIC DIAGRAM OF PAN/TILT HEAD WV-PH10

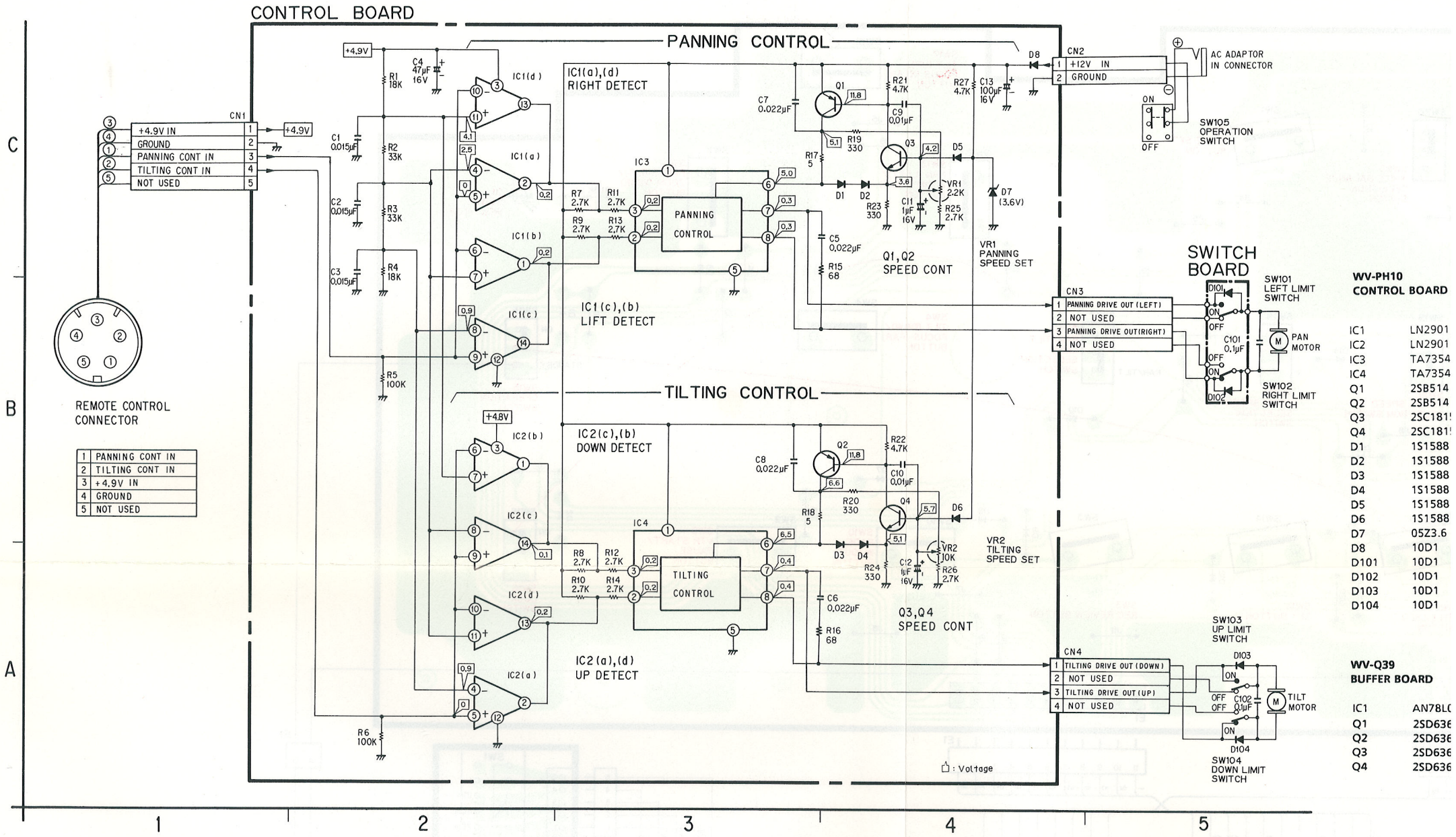

WV-PH10 CONTROL BOARD	
IC1	LN2901
IC2	LN2901
IC3	TA7354
IC4	TA7354
Q1	2SB514
Q2	2SB514
Q3	2SC1815
Q4	2SC1815
D1	1S1588
D2	1S1588
D3	1S1588
D4	1S1588
D5	1S1588
D6	1S1588
D7	05Z3.6
D8	10D1
D101	10D1
D102	10D1
D103	10D1
D104	10D1

WV-Q39 BUFFER BOARD	
IC1	AN78L0
Q1	2SD636
Q2	2SD636
Q3	2SD636
Q4	2SD636

CONDUCTOR VIEW OF PAN/TILT HEAD WV-PH10

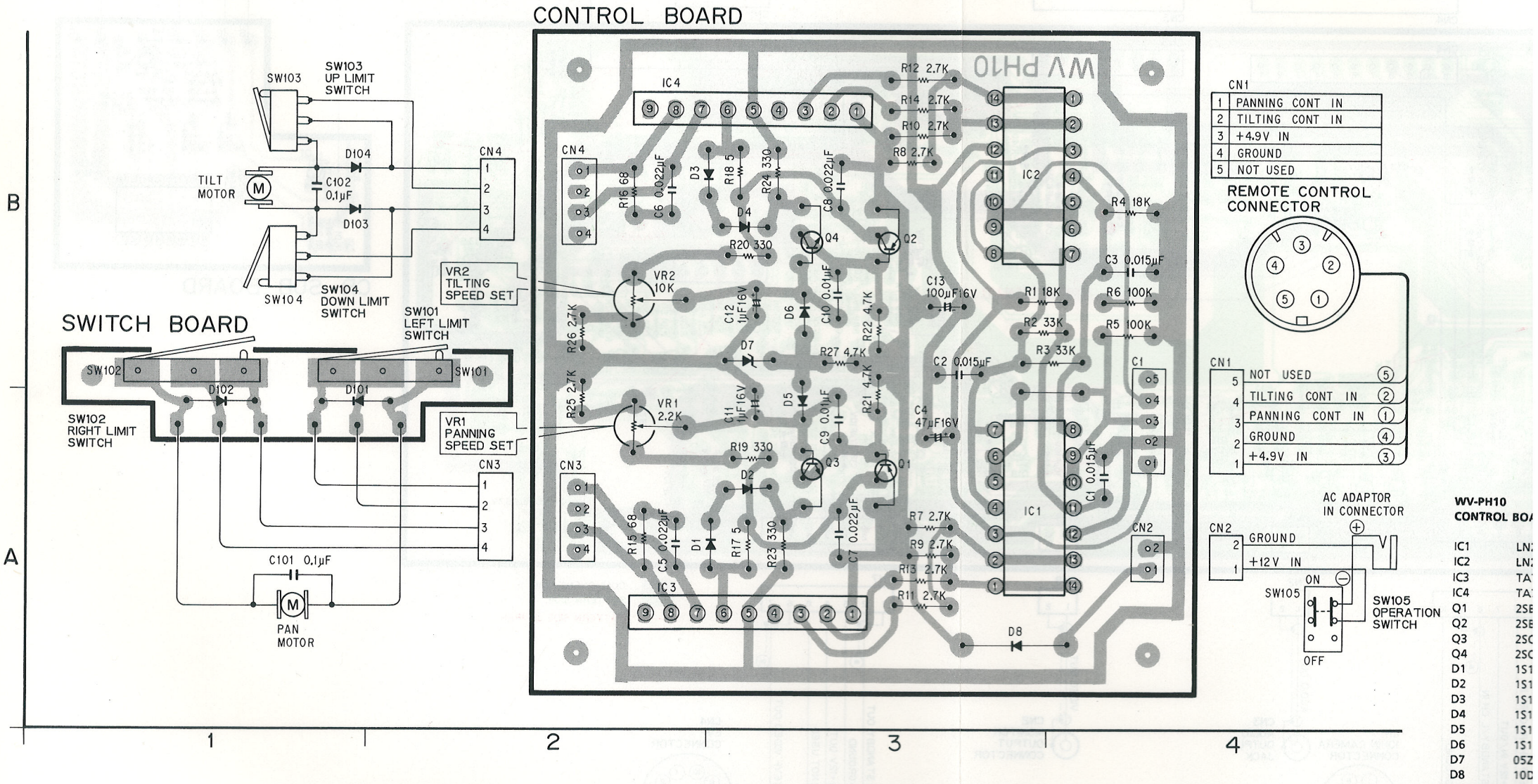

WV-PH10 CONTROL BOA	
IC1	LN2
IC2	LN2
IC3	TA7
IC4	TA7
Q1	2SB
Q2	2SB
Q3	2SC
Q4	2SC
D1	1S1
D2	1S1
D3	1S1
D4	1S1
D5	1S1
D6	1S1
D7	05Z
D8	10D
D101	10D
D102	10D
D103	10D
D104	10D

WV-Q39 BUFFER BOARD	
IC	AN
Q1	2SD
Q2	2SD
Q3	2SD
Q4	2SD

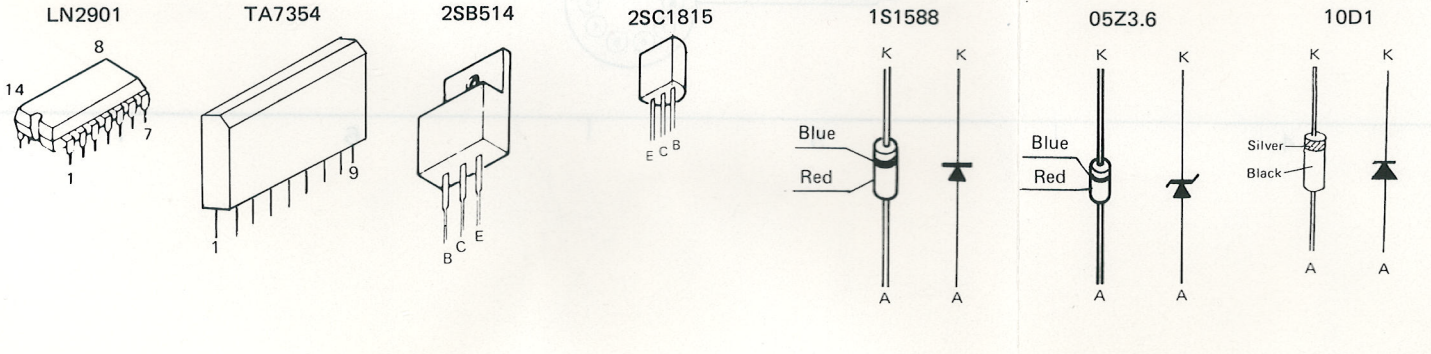

SCHEMATIC DIAGRAM OF MOUNTING BRACKET WV-Q39

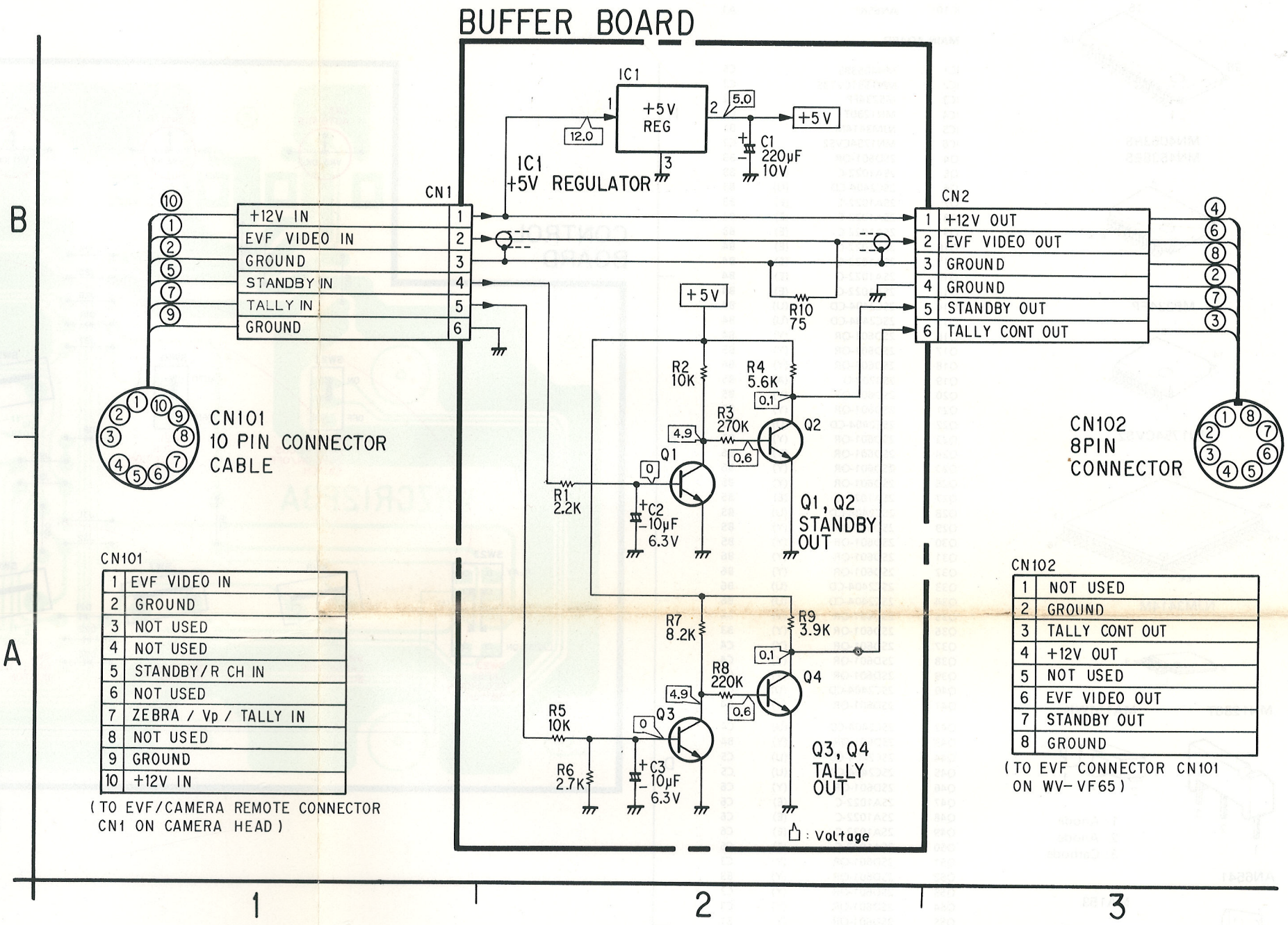

CN101

1	EVF VIDEO IN
2	GROUND
3	NOT USED
4	NOT USED
5	STANDBY/R CH IN
6	NOT USED
7	ZEBRA / Vp / TALLY IN
8	NOT USED
9	GROUND
10	+12V IN

(TO EVF/CAMERA REMOTE CONNECTOR CN1 ON CAMERA HEAD)

CN102

1	NOT USED
2	GROUND
3	TALLY CONT OUT
4	+12V OUT
5	NOT USED
6	EVF VIDEO OUT
7	STANDBY OUT
8	GROUND

(TO EVF CONNECTOR CN101 ON WV-VF65)

CONDUCTOR VIEW OF MOUNTING BRACKET WV-Q39

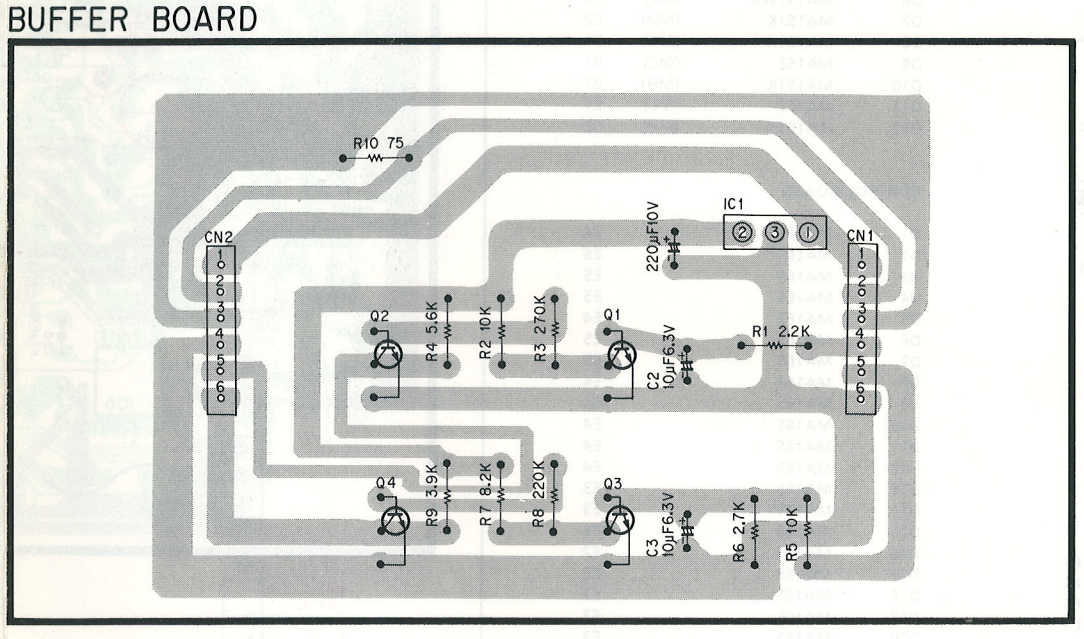

(TO EVF CONNECTOR CN101 ON WV-VF65)

(TO EVF/CAMERA REMOTE CONNECTOR CN1 ON CAMERA HEAD)

2SD636-QR

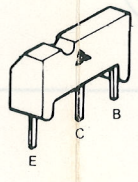

AN78L05

WV-PH10 CONTROL BOARD

IC1	LN2901	B2, C2
IC2	LN2901	A2, B2
IC3	TA7354	C3
IC4	TA7354	A3
Q1	2SB514	C4
Q2	2SB514	B4
Q3	2SC1815	C4
Q4	2SC1815	B4
D1	1S1588	C4
D2	1S1588	C4
D3	1S1588	B4
D4	1S1588	B4
D5	1S1588	C4
D6	1S1588	B4
D7	05Z3.6	C4
D8	10D1	C4
D101	10D1	B5
D102	10D1	B5
D103	10D1	A5
D104	10D1	A5

WV-Q39 BUFFER BOARD

IC	AN78L05	B2
Q1	2SD636-QR	B3
Q2	2SD636-QR	B2
Q3	2SD636-QR	A3
Q4	2SD636-QR	A2

WIRING DIAGRAM OF 12X AUTOMATIC IRIS STUDIO ZOOM LENS WV-LZ15/12

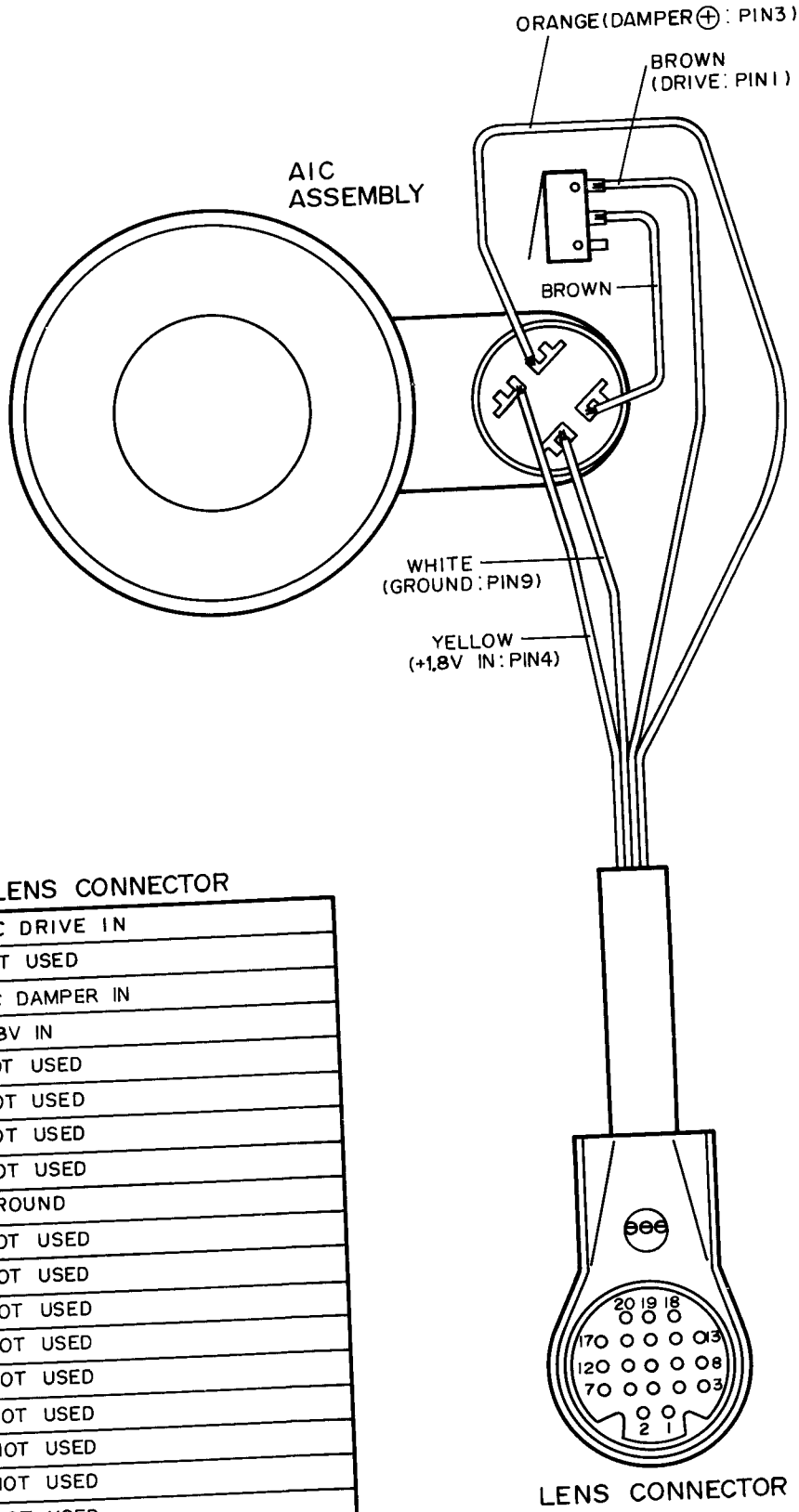

CN1 LENS CONNECTOR

1	AIC DRIVE IN
2	NOT USED
3	AIC DAMPER IN
4	+1.8V IN
5	NOT USED
6	NOT USED
7	NOT USED
8	NOT USED
9	GROUND
10	NOT USED
11	NOT USED
12	NOT USED
13	NOT USED
14	NOT USED
15	NOT USED
16	NOT USED
17	NOT USED
18	NOT USED
19	NOT USED
20	NOT USED

REPLACEMENT PARTS LIST

Important Notice

1. Components identified by "△" mark have special characteristics important for safety. When replacing any of these components, use only manufacturer's specified parts.
2. Components identified by "o" mark are new parts used from this model.
3. Complete printed circuit board assembly is not available as replacement part.

SYMBOL NO.		PART NO.	DESCRIPTION
REMOTE CONTROL UNIT WV-RC35			
MISCELLANEOUS			
IC7		AN6541	IC
Q1	△	2SB946-PQ	Transistor
D1		LN21RPH	Power Indicator
D2		YFLN31GCP	Tally Indicator
R1-4		ERD25FJ750	Carbon 75 ohms 1/4W
T1	△	YFPHB66V042	Power Transformer
SW1	△	EST1565T	Operation Switch
SW2		ESD391T	AC/DC Selection Switch
F10	△	oXBA1F20NU100	Current Fuse 2A 125V
CN1		YWLJ194-1-1	Intercom Jack
CN2		XLR-4-32F512	EXT DC Connector
CN3		YFCNR-1204J	TALLY/INTERCOM Connecter
CN4,5		YFBNC-BRZ-1	Video Out Connector
CN6-9		YFRBS-11	GEN-LOCK IN/AUX IN Connector
CN10	△	YWKP30SVT200	AC Power Cord for NTSC
	△	YWHBS-3-08	AC Power Cord for WV-RC35B
	△	YWC0309-08F	AC Power Cord for WV-RC35C, WV-RC35N
	△	YWVM0309-08	AC Power Cord for WV-RC35G
	△	YWKPGTSA-3	AC Power Cord for WV-RC35NA
CN11		oYFRC35-J12	14 pin Camera Cable Connector Assy
E10	△	YWXN1157-03	Fuse Holder
M1		oYFV5WA0286A3	Panel for NTSC,WV-RC35BCG
		oYFV5WB0286A3	Panel for WV-RC35N,WV-RC35NA
M2		oYFV5WA0287A3	Rear Panel for WV-RC35USA,PAL
		oYFV5WB0287A3	Rear Panel for WV-RC35Canada
M4		oYFV5EA0387A2	Cover
M5		YFV5DA0005A4	Ornament
M6		oYFV2KA0147B2	Main Chassis
M7		oYFV2KA0148B3	Front Chassis
M8		YFV5RB0004A4	Knob(Red)
M9		YFV5RC0004A4	Knob(Blue)
M10		YFV6JA0036B4	Push Switch Button
M11		YWV3801HR01	Knob(Black)
M12		oYFV2CA0117A4	Hold Plate for Power Transformer
M13		oYFV2SA0254A4	Mounting Angle
M14		YWJ500PAM01	Mounting Angle A for Terminal
M15		YWJ500PAM02B	Mounting Angle B
M16		YWLSR-10	Rubber Foot
M20		YFV2HA0402A3	Shield Parts for Power Transformer
M21		oYFV4HA0011A4	Lock Shaft
M22	△	oYFV2PA0167A4	Insulator Paper
M23		YWA620AER01	Insulator Washer(X2)
M24		YWJ500PWB01A	Cushion
M25		YFV3AA0014A4	Dust Proof Parts
M26	△	YFV7MA0081A4	Safety Label
M27	△	YFV7MA0180A4	Fuse Rated Label A for NTSC
	△	YFV7MA0209A4	Fuse Rated Label A for PAL
M28	△	YFV7MA0197A4	Safety Label for NTSC
		YFV7MA0015A4	Safety Label for PAL
M29	△	YFV7MA0231A4	Caution Label
M30	△	YFV7MB0099A4	Safety Label for WV-RC35USA,PAL
		YFV7MB0104A4	Safety Label for WV-RC35Canada
M31	△	YFV7MB0103A4	Chock Label(X2)
M33	△	oYFV7QA1079B4	Main Label for WV-RC35USA
	△	oYFV7QA1080B4	Main Label for WV-RC35Canada
	△	oYFV7QA1081B4	Main Label for WV-RC35B
	△	oYFV7QA1082B4	Main Label for WV-RC35G
	△	oYFV7QA1083B4	Main Label for WV-RC35C
	△	oYFV7QA1084B4	Main Label for WV-RC35N
	△	oYFV7QA1085B4	Main Label for WV-RC35NA
M34	△	oYFV7MA0207A4	Fuse RatedLabel for B for PAL
M35	△	YFV7MA0219A4	Fuse Rated Label C for PAL
M36	△	YW-BCG-UR01B	Earth Label for PAL
M37	△	YWS-CULRB03	Fuse Change Label for WV-RC35USA
		YWS-CCSRB01	Fuse Change Label for WV-RC35Canada
M40	△	YWSR5N4	Cord Clamp for WV-RC35USA
M41	△	YWSR6N3-4	Cord Clamp for WV-RC35Canada
		YWSR6W-1	Cord Clamp for PAL
M42		YWJ800PWB01	LED Holder

MAIN BOARD

SYMBOL NO.	PART NO.	DESCRIPTION	
PCB1	o YFVKZRC35P1A	Printed Circuit Board Assy for NTSC	
	o YFVKZRC35E1A	Printed C ircuit Board Assy for PAL	
IC1	MN1551CVT3S	IC	
IC2	MN4053BS	IC	
IC3	M5234FP	IC	
IC4	NJM3414M	IC	
IC5	NJM386M	IC	
IC6	MN1280T	IC	
Q1	2SD601-QR	Transistor	
Q2,3	2SC2404-CD	Transistor	
Q4	2SA1022-C	Transistor	
Q5	2SC2404-CD	Transistor	
Q6-10	2SA1022-C	Transistor	
Q11	2SC2404-CD	Transistor	
Q12,13	2SD601-QR	Transistor	
Q14	2SA1022-C	Transistor	
Q15	2SC2404-CD	Transistor	
Q16,17	2SB709-Q	Transistor	
Q18	2SD601-QR	Transistor	
Q19	2SB709-Q	Transistor	
Q20	2SD601-QR	Transistor	
Q21	2SA1022-C	Transistor	
Q22	2SC2404-CD	Transistor	
Q23-25	2SA1022-C	Transistor	
Q26	2SC2404-CD	Transistor	
Q27,28	2SD601-QR	Transistor	
Q29	2SA1022-C	Transistor	
Q30-32	2SC2404-CD	Transistor	
Q33,34	2SD601-QR	Transistor	
Q35	2SB709-Q	Transistor	
Q36-44	2SD601-QR	Transistor	
Q45	2SB709-Q	Transistor	
Q46	2SD601-QR	Transistor	
Q47	2SB709-Q	Transistor	
D1-8	MA151K	Diode	
R1	YF2116273JT	Carbon	27K ohms 1/16W
R2	YF2116103JT	Carbon	10K ohms 1/16W
R3	YF2116391JT	Carbon	390 ohms 1/16W
R4	YF2116751JT	Carbon	750 ohms 1/16W
R5	YF2116681JT	Carbon	680 ohms 1/16W
R6	YF2116271JT	Carbon	270 ohms 1/16W
R7	YF2116182JT	Carbon	1.8K ohms 1/16W
R8	YF2116560JT	Carbon	56 ohms 1/16W
R9	YF2116182JT	Carbon	1.8K ohms 1/16W
R10	YF2116222GT	Carbon	2.2K ohms 1/16W
R11	YF2116183JT	Carbon	18K ohms 1/16W
R12	YF2116272JT	Carbon	2.7K ohms 1/16W
R13	YF2116222GT	Carbon	2.2K ohms 1/16W
R14	YF2116682JT	Carbon	6.8K ohms 1/16W
R15	YF2116332JT	Carbon	3.3K ohms 1/16W
R16	YF2116560JT	Carbon	56 ohms 1/16W
R17	YF2116681JT	Carbon	680 ohms 1/16W
R18	YF2116560JT	Carbon	56 ohms 1/16W

SYMBOL NO.	PART NO.	DESCRIPTION	
R19	YF2116182JT	Carbon	1.8K ohms 1/16W
R20	YF2116332JT	Carbon	3.3K ohms 1/16W
R21	YF2116560JT	Carbon	56 ohms 1/16W
R22	YF2116392JT	Carbon	3.9K ohms 1/16W
R23	YF2116122JT	Carbon	1.2K ohms 1/16W
R24	YF2116560JT	Carbon	56 ohms 1/16W
R25	YF2116682JT	Carbon	6.8K ohms 1/16W
R26	YF2116303JT	Carbon	30K ohms 1/16W
R27	YF2116560JT	Carbon	56 ohms 1/16W
R28	YF2116682JT	Carbon	6.8K ohms 1/16W
R29	YF2116303JT	Carbon	30K ohms 1/16W
R30	YF2116622JT	Carbon	6.2K ohms 1/16W
R31	YF2116103JT	Carbon	10K ohms 1/16W
R32	YF2116153JT	Carbon	15K ohms 1/16W
R33	YF2116203JT	Carbon	20K ohms 1/16W
R34	YF2116153JT	Carbon	15K ohms 1/16W
R35	YF2116393JT	Carbon	39K ohms 1/16W
R36	YF2116153JT	Carbon	15K ohms 1/16W
R37-40	YF2116333GT	Carbon	33K ohms 1/16W
R41	YF2116560JT	Carbon	56 ohms 1/16W
R42	YF2116392JT	Carbon	3.9K ohms 1/16W
R43	YF2116122JT	Carbon	1.2K ohms 1/16W
R44	YF2116560JT	Carbon	56 ohms 1/16W
R45	YF2116512JT	Carbon	5.1K ohms 1/16W
R46	YF2116560JT	Carbon	56 ohms 1/16W
R47,48	YF2116750JT	Carbon	75 ohms 1/16W
R49	YF2116102GT	Carbon	1K ohms 1/16W
R50	YF2116105JT	Carbon	1M ohms 1/16W
R51	YF2116562JT	Carbon	5.6K ohms 1/16W
R52	YF2116223JT	Carbon	22K ohms 1/16W
R53	YF2116562JT	Carbon	5.6K ohms 1/16W
R54	YF2116183JT	Carbon	18K ohms 1/16W
R55	YF2116102GT	Carbon	1K ohms 1/16W
R56	YF2116222GT	Carbon	2.2K ohms 1/16W
R57	YF2116223JT	Carbon	22K ohms 1/16W
R58,59	YF2116103JT	Carbon	10K ohms 1/16W
R60	YF2116163JT	Carbon	16K ohms 1/16W
R61	YF2116682JT	Carbon	6.8K ohms 1/16W
R62	YF2116273JT	Carbon	27K ohms 1/16W
R63	YF2116103JT	Carbon	10K ohms 1/16W
R64	YF2116222GT	Carbon	2.2K ohms 1/16W
R65	YF2116682JT	Carbon	6.8K ohms 1/16W
R66	YF2116561JT	Carbon	560 ohms 1/16W
R67	YF2116682JT	Carbon	6.8K ohms 1/16W
R68	YF2116561JT	Carbon	560 ohms 1/16W
R69	YF2116562JT	Carbon	5.6K ohms 1/16W
R70	YF2116152JT	Carbon	1.5K ohms 1/16W
R71	YF2116332JT	Carbon	3.3K ohms 1/16W
R72	YF2116432JT	Carbon	4.3K ohms 1/16W
R73	YF2116560JT	Carbon	56 ohms 1/16W
R74	YF2116122JT	Carbon	1.2K ohms 1/16W
R75	YF2116333GT	Carbon	33K ohms 1/16W
R76	YF2116560JT	Carbon	56 ohms 1/16W
R77	YF2116682JT	Carbon	6.8K ohms 1/16W
R78	YF2116333GT	Carbon	33K ohms 1/16W

SYMBOL NO.	PART NO.	DESCRIPTION
R79	YF2116101JT	Carbon 100 ohms 1/16W
R80	YF2116562JT	Carbon 5.6K ohms 1/16W
R81	YF2116472JT	Carbon 4.7K ohms 1/16W
R82	YF2116243JT	Carbon 24K ohms 1/16W
R83	YF2116560JT	Carbon 56 ohms 1/16W
R84	YF2116333GT	Carbon 33K ohms 1/16W
R85	YF2116392JT	Carbon 3.9K ohms 1/16W
R86	YF2116222GT	Carbon 2.2K ohms 1/16W
R87	YF2116103JT	Carbon 10K ohms 1/16W
R88	YF2116101JT	Carbon 100 ohms 1/16W
R89	YF2116680JT	Carbon 68 ohms 1/16W
R90	YF2116750JT	Carbon 75 ohms 1/16W
R91	YF2116822JT	Carbon 8.2K ohms 1/16W
R92	YF2116123JT	Carbon 12K ohms 1/16W
R93,94	YF2116821GT	Carbon 820 ohms 1/16W
R95	YF2116101JT	Carbon 100 ohms 1/16W
R96	YF2116272JT	Carbon 2.7K ohms 1/16W
R97	YF2116561JT	Carbon 560 ohms 1/16W
R98	YF2116332JT	Carbon 3.3K ohms 1/16W
R99,100	YF2116560JT	Carbon 56 ohms 1/16W
R101	YF2116182JT	Carbon 1.8K ohms 1/16W
R102	YF2116122JT	Carbon 1.2K ohms 1/16W
R103	YF2116392JT	Carbon 3.9K ohms 1/16W
R104	YF2116560JT	Carbon 56 ohms 1/16W
R105	YF2116432JT	Carbon 4.3K ohms 1/16W
R106	YF2116392JT	Carbon 3.9K ohms 1/16W
R107	YF2116222GT	Carbon 2.2K ohms 1/16W
R108	YF2116103JT	Carbon 10K ohms 1/16W
R109	YF2116101JT	Carbon 100 ohms 1/16W
R110	YF2116680JT	Carbon 68 ohms 1/16W
R111	YF2116750JT	Carbon 75 ohms 1/16W
R114	YF2116473GT	Carbon 47K ohms 1/16W
R115	YF2116912JT	Carbon 9.1K ohms 1/16W
R116,117	YF2116472JT	Carbon 4.7K ohms 1/16W
R118	YF2116102GT	Carbon 1K ohms 1/16W
R119-121	YF2116473GT	Carbon 47K ohms 1/16W
R122	YF2116222GT	Carbon 2.2K ohms 1/16W
R123	YF2116183JT	Carbon 18K ohms 1/16W
R124	YF2116332JT	Carbon 3.3K ohms 1/16W
R125	YF2116222GT	Carbon 2.2K ohms 1/16W
R126	YF2116101JT	Carbon 100 ohms 1/16W
R127	YF2116201JT	Carbon 200 ohms 1/16W
R128	YF2116183JT	Carbon 18K ohms 1/16W
R129	YF2116332JT	Carbon 3.3K ohms 1/16W
R130	YF2116102GT	Carbon 1K ohms 1/16W
R131	YF2116101JT	Carbon 100 ohms 1/16W
R132	YF2116183JT	Carbon 18K ohms 1/16W
R133	YF2116201JT	Carbon 200 ohms 1/16W
R134	YF2116332JT	Carbon 3.3K ohms 1/16W
R135	YF2116102GT	Carbon 1K ohms 1/16W
R136	YF2116183JT	Carbon 18K ohms 1/16W
R137	YF2116332JT	Carbon 3.3K ohms 1/16W
R138	YF2116102GT	Carbon 1K ohms 1/16W
R139	YF2116101JT	Carbon 100 ohms 1/16W
R140	YF2116102GT	Carbon 1K ohms 1/16W

SYMBOL NO.	PART NO.	DESCRIPTION
R141	YF2116752JT	Carbon 7.5K ohms 1/16W
R142	YF2116102GT	Carbon 1K ohms 1/16W
R143	YF2116823JT	Carbon 82K ohms 1/16W
R144	YF2116560JT	Carbon 56 ohms 1/16W
R145	YF2116101JT	Carbon 100 ohms 1/16W
R146	YF2116104JT	Carbon 100K ohms 1/16W
R147	YF2116560JT	Carbon 56 ohms 1/16W
R149,150	YF2116473GT	Carbon 47K ohms 1/16W
R151	YF2116103JT	Carbon 10K ohms 1/16W
R152	YF2116473GT	Carbon 47K ohms 1/16W
R153	YF2116103JT	Carbon 10K ohms 1/16W
R154	YF2116473GT	Carbon 47K ohms 1/16W
R155	YF2116333GT	Carbon 33K ohms 1/16W
R156	YF2116562JT	Carbon 5.6K ohms 1/16W
R157	YF2116103JT	Carbon 10K ohms 1/16W
R158	YF2116561JT	Carbon 560 ohms 1/16W
R159	YF2116101JT	Carbon 100 ohms 1/16W
R160	YF2116750JT	Carbon 75 ohms 1/16W
R161	YF2116333GT	Carbon 33K ohms 1/16W
R162	YF2116562JT	Carbon 5.6K ohms 1/16W
R163	YF2116103JT	Carbon 10K ohms 1/16W
R164	YF2116561JT	Carbon 560 ohms 1/16W
R165	YF2116101JT	Carbon 100 ohms 1/16W
R166	YF2116750JT	Carbon 75 ohms 1/16W
R167	YF2116223JT	Carbon 22K ohms 1/16W
R168	YF2116333GT	Carbon 33K ohms 1/16W
R169,170	YF2116103JT	Carbon 10K ohms 1/16W
R171	YF2116122JT	Carbon 1.2K ohms 1/16W
R172	YF2116331JT	Carbon 330 ohms 1/16W
R173	YF2116562JT	Carbon 5.6K ohms 1/16W
R174	YF2116101JT	Carbon 100 ohms 1/16W
R175	YF2116332JT	Carbon 3.3K ohms 1/16W
R176	YF2116822JT	Carbon 8.2K ohms 1/16W
R177	YF2116103JT	Carbon 10K ohms 1/16W
R178	YF2116152JT	Carbon 1.5K ohms 1/16W
R179	YF2116750JT	Carbon 75 ohms 1/16W
R192,193	YF2116182JT	Carbon 1.8K ohms 1/16W
VR1	EVN8ACA00BE3	Variable Resistor 2.2K ohms
VR2	RK097115KB	Variable Resistor 5K ohms
Z1	YFRKM8LFW154	Block Resistor
C1	ECEA1AKS470	Electrolytic 47 µF 10V
C2,3	ECEA0JKS101	Electrolytic 100µF 6.3V
C4	YF400100CHDT	Ceramic 10 pF
C5	YF400300CHJT	Ceramic 30 pF
C6	YF400560CHJT	Ceramic 56 pF
C7	YF400180CHJT	Ceramic 18 pF
C8	YF400220CHJT	Ceramic 22 pF
C9,10	YF400180CHJT	Ceramic 18 pF
C11	ECEA1CKS100	Electrolytic 10 µF 16V
C12	ECEA1AKS470	Electrolytic 47 µF 10V
C13,14	ECEA1ASS102	Electrolytic 1000µ F 10V
C15	ECEA1AKS470	Electrolytic 47 µF 10V
C16	YF400101CHJT	Ceramic 100 pF
C17	YF426224FZS	Ceramic 0.22 µF 50V
C18	YF400680CHJT	Ceramic 68 pF CH
C19	YF400222XKT	Ceramic 2200 p F

SYMBOL NO.	PART NO.	DESCRIPTION
C20	ECEA1AKS470	Electrolytic 47 µF 10V
C21	YF400180CHJT	Ceramic 18 pF
C22	YF400820CHJT	Ceramic 82 pF
C23	ECEA0JKS101	Electrolytic 100µF 6.3V
C24	YF400220CHJT	Ceramic 22 pF
C25,26	YF400150CHJT	Ceramic 15 pF
C27	YF400100CHDT	Ceramic 10 pF
C28	YF400220CHJT	Ceramic 22 pF
C29	ECEA1CKS100	Electrolytic 10 µF 16V
C30	ECEA1AKS470	Electrolytic 47 µF 10V
C31	ECEA1AU471	Electrolytic 470 µF 10V
C32	ECEA1AKS470	Electrolytic 47 µF 10V
C33	YF400820CHJT	Ceramic 82 pF
C34	ECEA0JKS101	Electrolytic 100µF 6.3V
C35	YF400101CHJT	Ceramic 100 pF
C36	ECEA1CKS100	Electrolytic 10 µF 16V
C37	ECEA1AKS470	Electrolytic 47 µF 10V
C38	ECEA1AU471	Electrolytic 470 µF 10V
C39	ECEA1AKS470	Electrolytic 47 µF 10V
C40	ECEA1CKS470	Electrolytic 47 µF 16V
C41	ECEA1CKN100	Electrolytic 10 µF 16V
C42	YF400103XKT	Ceramic 0.01 µF
C43	ECEA1CKS100	Electrolytic 10 µF 16V
C44	ECEA1AU221	Electrolytic 220 µF 10V
C45	ECEA1CKN100	Electrolytic 10 µF 16V
C46	ECEA1CKS100	Electrolytic 10 µF 16V
C47	ECEA1AU221	Electrolytic 220 µF 10V
C48	ECEA1CKN100	Electrolytic 10 µF 16V
C49,50	ECEA1CKS100	Electrolytic 10 µF 16V
C51	ECEA1AKK100	Electrolytic 10 µF 10V
C52	YF400473FZT	Ceramic 0.047 µF
C53	ECEA1CU101	Electrolytic 100 µF 16V
C54	ECEA1HKSR22	Electrolytic 0.22 µF 50V
C55	YF400332XKT	Ceramic 3300 pF
C56,57	ECEA1AKS470	Electrolytic 47 µF 10V
C58	YF400473FZT	Ceramic 0.047 µF
C59	ECEA1AU101	Electrolytic 100 µF 10V
C60	ECEA1AKN470	Electrolytic 47 µF 10V
C61	ECEA1AU101	Electrolytic 100 µF 10V
C62	ECEA1AKS470	Electrolytic 47 µF 10V
C63	YF400010CHDT	Ceramic 1 pF
C64,65	ECEA1AU101	Electrolytic 100 µF 10V
C66	YF400010CHDT	Ceramic 1 pF
C71	ECEA1AKS470	Electrolytic 47 µF 10V
C72	ECEA1VKS4R7	Electrolytic 4.7µF 35V
L1-4	EL05SI8R2K	Coil 8.2µH
SW1	YFSBU1024	Rotary Switch
X1	YFEF0-FC4004	Oscillator
CF1	YFSTR4043	Filter for NTSC
	YFSTR4044	Filter for PAL
J148	YF21160R00T	Jumper Resistor
CN1-JM	EMCS0850Z	5 pin Jack Male
CN2-JM	EMCS1050Z	10 pin Jack Male
CN3,4-JM	YFS7PS2T2EF	7 pin Jack Male
CN5-JM	EMCS0350Z	3 pin Jack Male

SYMBOL NO.	PART NO.	DESCRIPTION
CN6-11	EMCS0250Z	2 pin Jack Male
CN12	EMCS0352M	3 pin Jack Male
CN13	EMCS0450Z	4 pin Jack Male
CN14	EMCS0252M	2 pin Jack Male

POWER BOARD

PCB2		o YFVKZRC35P2A	Printed Circuit Board Assy for NTSC
		o YFVKZRC35E2A	Printed Circuit Board Assy for PAL
IC1	⚠	NJM3524D	IC
Q2	⚠	2SC1384-QRS	Transistor
Q3	⚠	2SA684-QR	Transistor
D1	⚠	D5FB2052	Diode
D2	⚠	ESAB82-004	Diode
D4	⚠	RM4ZLFK1	Diode
R1		ERD10TJ102	Carbon 1K ohms 1/8W
R2-4		ERD10TJ472	Carbon 4.7K ohms 1/8W
R6		ERD10TJ273	Carbon 27K ohms 1/8W
R7	⚠	ERG2ANJ470	Metal 47 ohms 2W
R8	⚠	ERG2ANJ102H	Metal 1K ohms 2W
R9	⚠	ERG2ANJ621H	Metal 620 ohms 2W
VR1		EVN8ACA00BE3	Variable Resistor 2.2K ohms
C1		ECKD2H103KB2	Ceramic 0.01 µF 500V
C2		ECES1HU472R	Electrolytic 4700µF 50V
C3		ECEA1AK470	Electrolytic 47 µF 10V
C4		ECCF1H331JC	Ceramic 330 pF
C5		ECEA1HF101V	Electrolytic 100 µF 50V
C6		ECKW1H222KB5	Ceramic 2200 pF 50V
C7		ECEA1EK100	Electrolytic 10 µF 25V
C8		ECQM1H153JZ	Plastic 0.015 µF 50V
C9,10		ECET25R222SU	Electrolytic 2200 µF 25V
C12,13		ECKD2H103KB2	Ceramic 0.01 µF 100V
C14		ECEA1EK100	Electrolytic 10 µF 25V
C15		ECQM1H104JZ	Plastic 0.1 µF 50V
L1		YF15PF470K	Coil 47 µH
L2		ELC18E006	Coil 330 µH
L3		YF15PF470K	Coil 47 µH
F1	⚠	YFSP73A	Current Fuse 3A 125V for NTSC
	⚠	YFICPF75	Current Fuse 3.15A 250V for PAL
F2	⚠	XBA1C30NU100	Current Fuse 3A 125V for NTSC
	⚠	XBA2C31ET0A	Current Fuse 3.15A 250V for PAL
CN1,2-JM		EMCS0352M	3 pin Jack Male
E2		YWSN5053	Fuse Holder
M17		o YFV2HA0399A4	Shield Case
M18		o YFV2HA0400A4	Shield Cover A
M19		o YFV2HA0401A4	Shield Cover B

SYMBOL NO.	PART NO.	DESCRIPTION
CONTROL BOARD		
PCB3	o YFVKZRC35P3A	Printed Circuit Board Assy
D1-3	MA165	Diode
R1	ERD10TJ103	Carbon 10K ohms 1/8W
R2	ERD10TJ203	Carbon 20K ohms 1/8W
R3	ERD10TJ103	Carbon 10K ohms 1/8W
R4	ERD10TJ203	Carbon 20K ohms 1/8W
R7-10	YF2116681JT	Carbon 680 ohms 1/16W
R11	ERD10TJ161	Carbon 160 ohms.1/8W
R12	ERD10TJ221	Carbon 220 ohms 1/8W
VR1-4	YFRK12K11CC	Variable Resistor 10K ohms
VR5	YFRK12K1KBCC	Variable Resistor 1K ohms
VR6	EVJ1KAS10B13	Variable Resistor 1K ohms
VR7	EVJ1KAS10B14	Variable Resistor 10K ohms
SW1	YFSPH222A	Push Switch
SW3-6	YFSSA042L12	Slide Switch
ACCESSORY PARTS/PACKAGING PARTS		
CN50	o YFCNR-1204P	4 pin Connector
M51	o YFV8QA1045AN	Operating Instruction for WV-RC35USA
	o YFV8QA1046AN	Operating Instruction for WV-RC35Canada
	o YFV8QA1047AN	Operating Instruction for WV-RC35BCG
	o YFV8QA1050AN	Operating Instruction for WV-RC35N
	o YFV8QA1090AN	Operating Instruction for WV-RC35NA
M52	VQA0120-3	Warranty Card for WV-RC35USA
	VQA0054-5	Warranty Card for WV-RC35Canada
	19998700419	Warranty Card for WV-RC35G
	YFV8UA0004A4	Warranty Card for WV-RC35NA
M53	YWV22XPRB99K	Service Center List for WV-RC35USA
M54 ⚠	YFV8SA0009CN	Safety Guide for WV-RC35USA
M55	XZB26X40C05	Polyethylene Bag for Printed
M56	XZB35X50C05	Polyethylene Bag for RCU
M57	YWT20X35C03	Polyethylene Bag for Connector
M60	o YFV9CA0852AN	Packaging for WV-RC35USA, WV-RC35N,WV-RC35NA
	o YFV9CA0903AN	Packaging for WV-RC35Canada
	o YFV9CA0904AN	Packaging for WV-RC35BCG
M61	YWS-RB032	Packing Label for WV-RC35USA

SYMBOL NO.	PART NO.	DESCRIPTION
RCU ADAPTOR WV-AD37		
Q21	2SC1398-QR	Transistor
SW1	YFSSB022L6NR	Power Selection Switch
CN1,2	YFBNC-BRZ-1	BNC Connector
CN3	YWLJ194-1-1	Intercam Jack
CN4	YFAD37RCU14P	14Pin RCU Connector
CN5	YFXLR432F512	4Pin External/DC Input Connector
M1	o YFV5EA0379A1	Cover
M2	o YFV5WA0281A4	Right Side Panel
M3	o YFV5WA0279A4	Panel-1
M4	o YFV5WA0280A4	Panel-2
M5 ⚠	o YFV7QA1075A4	Main Label for NTSC
⚠	o YFV7QA1102A4	Main Label for WV-AD37E
⚠	o YFV7QA1103A4	Main Label for WV-AD37N
M6 ⚠	o YFV7MA0106A4	Caution Label for NTSC
⚠	o YFV7MA0099A4	Caution Label for PAL
M7 ⚠	o YFV7SA0169B4	Switch Label
M8 ⚠	o YFV7MA0162A4	Fuse Label for NTSC
	o YFV7MA0219A4	Fuse Label for PAL
M9 ⚠	o YWS-CCSRB01	Fuse Change Label
M10	o YFV3CA0071A4	Mounting Angle for Intercom Jack
M11	o YFV2KA0145A3	Connector Chassis
M12	o YFV2SA0251A4	Mounting Angle
M13	o YFV5RA0048A4	Intercom Lebel Knob
M14	o YFV7MA0103A4	Chock Label for NTSC
M15	o YFV5EA0383A2	Mounting Base
M16	o YFV6JA0012A4	Button
M17	o YFV2CA0114A4	Hold Plate
M18	o YFV6GA0049A4	Mounting Plate
M19	o YFV6GA0050A4	Blank Plate
M20	o YFV4RA0009A4	Lock Lever
M21	o YFV4JA0084A4	Spring-A
M22	o YFV4JA0130A4	Spring Plate
M23	o YFV4JA0131A4	Spring-B
M24	o YFV5VA0045A4	Pad
M25	o YFV2EA0045A4	Mounting Guide for Connector
M26	o YFV5EA0406A4	Stopper Pin
M27	o YFV2EA0046A4	Mounting Plate
MAIN BOARD		
PCB1-1	o YFVKBAD37P1A	Printed Circuit Board Assy for NTSC
	o YFVKBAD37E1A	Printed Circuit Board Assy for PAL
IC3	MN4053BS	IC
IC4	M5234FP	IC
IC5	NJM3414M	IC
IC101	MN4011BS	IC
IC102	MN4516BS	IC
IC103	NJM4560M	IC
IC104	NJM3414M	IC
IC105	MN4053BS	IC
IC106	AN2020S	IC
Q1	2SC2404-CD	Transistor

SYMBOL NO.	PART NO.	DESCRIPTION
Q2-4	2SD601-QR	Transistor
Q5	2SC2404-CD	Transistor
Q6	2SB709-Q	Transistor
Q7-9	2SC2404-CD	Transistor
Q18	2SB709-Q	Transistor
Q19	2SD601-QR	Transistor
Q20,101	2SB709-Q	Transistor
Q102,103	2SB709-Q	Transistor
Q104	2SD601-QR	Transistor
Q105-109	2SC2404-CD	Transistor
Q110-115	2SD601-QR	Transistor
Q116-119	2SC2404-CD	Transistor
Q120	2SB709-Q	Transistor
Q121,122	2SC2404-CD	Transistor
Q123,124	2SC2404-CD	Transistor for PAL
Q125	2SD601-QR	Transistor for PAL
Q126	2SB709-Q	Transistor
Q127,128	2SD601-QR	Transistor
Q129	2SB709-Q	Transistor
Q130	2SC2404-CD	Transistor
Q131-133	2SD601-QR	Transistor
Q134	2SB709-Q	Transistor
Q135	2SD601-QR	Transistor
R1	YF2116153JT	Carbon 15K ohms 1/16W
R2	YF2116562JT	Carbon 5.6K ohms 1/16W
R3	YF2116222GT	Carbon 2.2K ohms 1/16W
R4	YF2116102GT	Carbon 1K ohms 1/16W
R5	YF2116332JT	Carbon 3.3K ohms 1/16W
R6,7	YF2116272JT	Carbon 2.7K ohms 1/16W
R8	YF2116105JT	Carbon 1M ohms 1/16W
R9	YF2116102GT	Carbon 1K ohms 1/16W
R10	YF2116223JT	Carbon 22K ohms 1/16W
R11	YF2116332JT	Carbon 3.3K ohms 1/16W
R12	YF2116103JT	Carbon 10K ohms 1/16W
R13,14	YF2116222GT	Carbon 2.2K ohms 1/16W
R15,16	YF2116102GT	Carbon 1K ohms 1/16W
R17	YF2116101JT	Carbon 100 ohms 1/16W
R18	YF2116103JT	Carbon 10K ohms 1/16W
R19,20	YF2116102GT	Carbon 1K ohms 1/16W
R21	YF2116103JT	Carbon 10K ohms 1/16W
R53	YF2116203JT	Carbon 20K ohms 1/16W
R54,55	YF2116103JT	Carbon 10K ohms 1/16W
R56	YF2116203JT	Carbon 20K ohms 1/16W
R57	YF2116222GT	Carbon 2.2K ohms 1/16W
R58	YF2116103JT	Carbon 10K ohms 1/16W
R59	YF2116562JT	Carbon 5.6K ohms 1/16W
R60	YF2116302JT	Carbon 3K ohms 1/16W
R61	YF2116332JT	Carbon 3.3K ohms 1/16W
R62	YF2116562JT	Carbon 5.6K ohms 1/16W
R63	YF2116392JT	Carbon 3.9K ohms 1/16W
R64	YF2116102GT	Carbon 1K ohms 1/16W
R65	YF2116183JT	Carbon 18K ohms 1/16W
R66	YF2116562JT	Carbon 5.6K ohms 1/16W
R67	YF2116392JT	Carbon 3.9K ohms 1/16W
R68,69	YF2116682JT	Carbon 6.8K ohms 1/16W

SYMBOL NO.	PART NO.	DESCRIPTION
R70,71	YF2116103JT	Carbon 10K ohms 1/16W
R72	YF2116622JT	Carbon 6.2K ohms 1/16W
R73,74	YF2116822JT	Carbon 8.2K ohms 1/16W
R75	YF2116332JT	Carbon 3.3K ohms 1/16W
R76	YF2116102GT	Carbon 1K ohms 1/16W
R77	YF2116103JT	Carbon 10K ohms 1/16W
R78	YF2116223JT	Carbon 22K ohms 1/16W
R79	YF2116681JT	Carbon 680 ohms 1/16W
R80,81	YF2116103JT	Carbon 10K ohms 1/16W
R82	YF2116102GT	Carbon 1K ohms 1/16W
R83	YF2116202JT	Carbon 2K ohms 1/16W
R84	YF2116750JT	Carbon 75 ohms 1/16W
R85	YF2116682JT	Carbon 6.8K ohms 1/16W
R86	YF2116103JT	Carbon 10K ohms 1/16W
R87	YF2116222GT	Carbon 2.2K ohms 1/16W
R88	YF2116332JT	Carbon 3.3K ohms 1/16W
R89	YF2116750JT	Carbon 75 ohms 1/16W
R90	YF2116104JT	Carbon 100K ohms 1/16W
R98	YF2116100JT	Carbon 10 ohms 1/16W
R99	YF2116332JT	Carbon 3.3K ohms 1/16W
R100	YF2116123JT	Carbon 12K ohms 1/16W
R101	YF2116222GT	Carbon 2.2K ohms 1/16W
R102,103	YF2116183JT	Carbon 18K ohms 1/16W
R104-106	YF2116223JT	Carbon 22K ohms 1/16W
R107-109	YF2116272JT	Carbon 2.7K ohms 1/16W
R110	YF2116182JT	Carbon 1.8K ohms 1/16W
R111	YF2116221JT	Carbon 220 ohms 1/16W
R112,113	YF2116132JT	Carbon 1.3K ohms 1/16W
R114	YF2116271JT	Carbon 270 ohms 1/16W
R115	YF2116221JT	Carbon 220 ohms 1/16W
R116	YF2116392JT	Carbon 3.9K ohms 1/16W
R117	YF2116272JT	Carbon 2.7K ohms 1/16W
R118	YF2116562JT	Carbon 5.6K ohms 1/16W
R119	YF2116123JT	Carbon 12K ohms 1/16W
R120	YF2116103JT	Carbon 10K ohms 1/16W
R121	YF2116393JT	Carbon 39K ohms 1/16W for NTSC
	YF2116683JT	Carbon 68K ohms 1/16W for PAL
R122	YF2116152JT	Carbon 1.5K ohms 1/16W
R123-125	YF2116103JT	Carbon 10K ohms 1/16W
R126	YF2116272JT	Carbon 2.7K ohms 1/16W
R127	YF2116222GT	Carbon 2.2K ohms 1/16W
R128,129	YF2116102GT	Carbon 1K ohms 1/16W
R130	YF2116333GT	Carbon 33K ohms 1/16W
R131	YF2116122JT	Carbon 1.2K ohms 1/16W
R132	YF2116182JT	Carbon 1.8K ohms 1/16W
R133	YF2116102GT	Carbon 1K ohms 1/16W
R134	YF2116183JT	Carbon 18K ohms 1/16W
R135	YF2116112JT	Carbon 1.1K ohms 1/16W
R136	YF2116682JT	Carbon 6.8K ohms 1/16W
R137	YF2116221JT	Carbon 220 ohms 1/16W
R138	YF2116473GT	Carbon 47K ohms 1/16W for NTSC
R139	YF2116821GT	Carbon 820 ohms 1/16W
R140	YF2116122JT	Carbon 1.2K ohms 1/16W

SYMBOL NO.	PART NO.	DESCRIPTION
R141	YF2116153JT	Carbon 15K ohms 1/16W
R142	YF2116392JT	Carbon 3.9K ohms 1/16W
R143	YF2116512JT	Carbon 5.1K ohms 1/16W
R144	YF2116122JT	Carbon 1.2K ohms 1/16W
R145,146	YF2116101JT	Carbon 100 ohms 1/16W
R147	YF2116333GT	Carbon 33K ohms 1/16W
R148	YF2116473GT	Carbon 47K ohms 1/16W
R149	YF2116750JT	Carbon 75 ohms 1/16W
R150	YF2116333GT	Carbon 33K ohms 1/16W
R151	YF2116151JT	Carbon 150 ohms 1/16W
R152	YF2116153JT	Carbon 15K ohms 1/16W
R153	YF2116331JT	Carbon 330 ohms 1/16W
R154	YF2116272JT	Carbon 2.7K ohms 1/16W
R155	YF2116102GT	Carbon 1K ohms 1/16W
R156	YF2116332JT	Carbon 3.3K ohms 1/16W
R157	YF2116103JT	Carbon 10K ohms 1/16W
R158	YF2116223JT	Carbon 22K ohms 1/16W
R159	YF2116472JT	Carbon 4.7K ohms 1/16W
R160	YF2116101JT	Carbon 100 ohms 1/16W
R161	YF2116123JT	Carbon 12K ohms 1/16W
R162	YF2116103JT	Carbon 10K ohms 1/16W
R163,165	YF2116102GT	Carbon 1K ohms 1/16W
R164	YF2116104JT	Carbon 100K ohms 1/16W
R165	YF2116102JT	Carbon 1K ohms 1/16W
R166	YF2116751JT	Carbon 750 ohms 1/16W for NTSC
	YF2116821JT	Carbon 820 ohms 1/16W for PAL
R167	YF2116102GT	Carbon 1K ohms 1/16W
R168	YF21160R00T	Carbon 0 ohms for NTSC
	YF2116222JT	Carbon 2.2K ohms 1/16W for PAL
R169	YF2116332JT	Carbon 3.3K ohms 1/16W
R170	YF2116103JT	Carbon 10K ohms 1/16W
R171	YF2116183JT	Carbon 18K ohms 1/16W
R172	YF2116822JT	Carbon 8.2K ohms 1/16W
R173	YF2116182JT	Carbon 1.8K ohms 1/16W
R174	YF2116271JT	Carbon 270 ohms 1/16W
R175	YF2116330JT	Carbon 33 ohms 1/16W
R176-178	YF2116102GT	Carbon 1K ohms 1/16W
R179	YF2116330JT	Carbon 33 ohms 1/16W for PAL
R180	YF2116102GT	Carbon 1K ohms 1/16W
R181-183	YF2116102GT	Carbon 1K ohms 1/16W for PAL
R184	YF2116330JT	Carbon 33 ohms 1/16W for PAL
R185 for PAL	YF2116821GT	Carbon 820 ohms 1/16W
R186	YF2116102GT	Carbon 1K ohms 1/16W for PAL
R187	YF2116332JT	Carbon 3.3K ohms 1/16W for PAL
R188	YF2116103JT	Carbon 10K ohms 1/16W
R189	YF2116392JT	Carbon 3.9K ohms 1/16W
R190	YF2116392JT	Carbon 3.9K ohms 1/16W for NTSC
	YF2116562JT	Carbon 5.6K ohms 1/16W for PAL

SYMBOL NO.	PART NO.	DESCRIPTION
R191	YF2116392JT	Carbon 3.9K ohms 1/16W for NTSC
	YF2116391JT	Carbon 390 ohms 1/16W for PAL
R192,193	YF2116102GT	Carbon 1K ohms 1/16W
R194	YF2116222GT	Carbon 2.2K ohms 1/16W for NTSC
	YF2116821GT	Carbon 820 ohms 1/16W for PAL
R195	YF2116103JT	Carbon 10K ohms 1/16W
R196	YF2116562JT	Carbon 5.6K ohms 1/16W
R197	YF2116223JT	Carbon 22K ohms 1/16W
R198	YF2116272JT	Carbon 2.7K ohms 1/16W
R199	YF2116104JT	Carbon 100K ohms 1/16W
R200,201	YF2116562JT	Carbon 5.6K ohms 1/16W
R202	YF2116102GT	Carbon 1K ohms 1/16W
R203	YF2116104JT	Carbon 100K ohms 1/16W
R204	YF2116222GT	Carbon 2.2K ohms 1/16W
R205	YF2116821GT	Carbon 820ohms 1/16W
R206	YF2116511JT	Carbon 510ohms 1/16W
R207	YF2116561JT	Carbon 560ohms 1/16W
R208	YF2116102GT	Carbon 1K ohms 1/16W
R209	YF2116750JT	Carbon 75 ohms 1/16W
R210	YF2116333GT	Carbon 33Kohms 1/16W
R211	YF2116153JT	Carbon 15Kohms 1/16W
R212	YF2116151JT	Carbon 150ohms 1/16W
R213	YF2116331JT	Carbon 330ohms 1/16W
R214	YF2116272JT	Carbon 2.7Kohms 1/16W
R215	YF2116102GT	Carbon 1K ohms 1/16W
R216	YF2116332JT	Carbon 3.3Kohms 1/16W
R217	YF2116103JT	Carbon 10Kohms 1/16W
R218	YF2116223JT	Carbon 22Kohms 1/16W
R219	YF2116472JT	Carbon 4.7Kohms 1/16W
R220	YF2116470JT	Carbon 47 ohms 1/16W
R221	YF2116181JT	Carbon 180 ohms 1/16W
R222	YF2116103JT	Carbon 10Kohms 1/16W
R223	YF2116223JT	Carbon 22Kohms 1/16W
R224	YF2116104JT	Carbon 100Kohms 1/16W
R225	LP161KGT57	Carbon 1K ohms 1/16W
R226	YF2116102GT	Carbon 1K ohms 1/16WR
R230	YF2116102GT	Carbon 1K ohms 1/16W
R231	YF2116103JT	Carbon 10K ohms 1/16W
R232	YF2116222GT	Carbon 2.2Kohms 1/16W for NTSC
	YF21160R00	Jumper Rasistor for PAL
R233	YF2116223GT	Carbon 22K ohms 1/16W
R234	YF2116181JT	Carbon 180 ohms 1/16W
R237	YF2116124JT	Carbon 120Kohms 1/16W for PAL
R238	YF2116243JT	Carbon 24K ohms 1/16W for PAL
VR1	YF6M2L10KB	Variable Resistor 10K ohms
VR2	YF6M2L1KB	Variable Resistor 1K ohms
VR101	EVM13SW00B14	Variable Resistor 10K ohms
VR102	EVM13SW00BE2	Variable Resistor 2D ohms
VR103	EVM13SW00BQ2	Variable Rasistor 4D ohms for PAL

SYMBOL NO.	PART NO.	DESCRIPTION
VR104	EVM13SW00BC3	Variable Resistor 1.5K ohms
VR105	EVM13SW00BE3	Variable Resistor 2.2K ohms
VR106,107	EVM13SW00B14	Variable Resistor 10K ohms
VR108	EVM13SW00BY2	Variable Resistor 330 ohms
VR109	EVM13SW00BC3	Variable Resistor 1.5K ohms
VR111	EVM13SW00BE2	Variable Resistor 220 ohms
C1	ECEA0JKS470	Electrolytic 47 µF 6.3V
C2	YF400390CHJT	Ceramic 39 pF
C3	YF426224FZS	Ceramic 0.22 µF 50V
C4	YF400101CHJT	Ceramic 100 pF
C5	YF400680CHJT	Ceramic 68 pF
C6	YF400101CHJT	Ceramic 100 pF
C7,8	YF400103FZT	Ceramic 0.01 µF
C21	ECEA1AKS470	Electrolytic 47 µF 10V
C23	ECEA0JKS470	Electrolytic 47 µF 6.3V
C24,25	ECEA1CKS100	Electrolytic 10 µF 16V
C26	ECEA1AKS470	Electrolytic 47 µF 10V
C27	ECEA0JKS101	Electrolytic 100µF 6.3V
C28	ECEA1AKS470	Electrolytic 47 µF 10V
C30	ECEA0JKS470	Electrolytic 47 µF 6.3V
C101	YF400121CHJT	Ceramic 120 pF
C102,103	YF400270CHJT	Ceramic 27 pF
C104	ECEA0JKS470	Electrolytic 47 µF 6.3V
C105	ECEA1AKS470	Electrolytic 47 µF 10V
C106	YF400270CHJT	Ceramic 27 pF
C107,108	ECEA1CKS100	Electrolytic 10 µF 16V
C109,110	YF400103XKT	Ceramic 0.01 µF
C111-114	ECEA1AKS470	Electrolytic 47 µF 10V
C115	ECEA1CKS100	Electrolytic 10 µF 16V
C116	ECEA1AKS470	Electrolytic 47 µF 10V
C117,118	ECEA1CKS100	Electrolytic 10 µF 16V
C119	YF400680CHJT	Ceramic 68 pF
C120	YF400103XKT	Ceramic 0.01 µF
C121	YF400560CHJT	Ceramic 56 pF
C122	YF400150CHJT	Ceramic 15 pF for NTSC
	YF400050CHDT	Ceramic 5 PF for PAL
C123	YF400103XKT	Ceramic 0.01 µF
C124-126	YF400104FZT	Ceramic 0.1 µF
C127	YF400220CHJT	Ceramic 22 pF for NTSC
	YF400120CHJT	Ceramic 12 pF for PAL
C128	YF400050CHDT	Ceramic 5 pF for PAL
C129	YF400104FZT	Ceramic 0.1 µF forPAL
C130	YF400104FZT	Ceramic 0.1 µF
C131	ECEA0JKS470	Electrolytic 47 µF 6.3V
C132	ECEA1HKS2R2	Electrolytic 2.2 µF 50V
C133,134	ECEA1CKS100	Electrolytic 10 µF 16V
C135	YF400030CHDT	Ceramic 3 pF
C136	ECEA1HKS2R2	Electrolytic 2.2 µF 50V
C137	YF400104FZT	Ceramic 0.1 µF
C138-140	YF400103XKT	Ceramic 0.01 µF
C141	ECEA1AKS470	Electrolytic 47 µF 10V
C142	YF400103XKT	Ceramic 0.01 µF
C143	ECEA1CKS100	Electrolytic 10 µF 16V
C144	YF400511CHJT	Ceramic 510pF
C145,146	ECEA1CKS100	Electrolytic 10 µF 16V

SYMBOL NO.	PART NO.	DESCRIPTION
C147	YF400680CHJT	Ceramic 68 pF CH
C148	ECEA0JKS470	Electrolytic 47 µF 6.3V
C149	ECEA1AKS470	Electrolytic 47 µF 10V
C150	YF400511CHJT	Ceramic 510 pF
C160	ECEA1AKS470	Electrolytic 47 uF 10V
C162	YF400104FZT	Ceramic 0.1 µF
C163	ECEA1AKS470	Electrolytic 47 µF 10V for PAL
CT1	ECRHA020D11	Trimmer Capacitor 20 PH
CT2	ECRHA020D11	Trimmer Capacitor 20 PH for PAL
L1,2	NL32T8R2K	Coil 8.2µH
L101-103	NL32T8R2K	Coil 8.2µH
SW1,2	YFSSS212YK	Slide Switch
CF1	YFSTR4043	Filter for NTSC
	YFSTR4044	Filter for PAL
CF4	YFT45P3R58	Filter for NTSC
	YFT45P4R43	Filter for PAL
CF101,102	YFSTR4045	Filter for NTSC
	YFSTR4046	Filter for PAL
F1 ⚠	YFSP510NM0	Current Fuse 1A
J1,10,11	YF21160R00T	Jumper Resistor
J13,14	YF21160R00T	Jumper Rasistor
CN1-JM	EMCS0650Z	6 pin Jack Male
CN2-JM	EMCS0950Z	9 pin Jack Male
CN3-JM	EMCS0350Z	5 pin Jack Male
CN4-JM	EMCS0650Z	6 pin Jack Male
CN5-JM	EMCS0350Z	3 pin Jack Male
CN6-8-JM	EMCS0250Z	2 pin Jack Male
CN9,10-JF	YFFPC11SS1T1	11 pin Jack Female
CN11,12-JM	YFS7PS2T2EF	7 pin Jack Male

MAIN BOARD

PCB1-2	o YFVKCAD37P1A	Printed Circuit Board Assy for NTSC
	o YFVKCAD37E1A	Printed Circuit Board Assy for PAL
IC1	YFNJM1496M	IC
IC2	MN74HC221S	IC
Q10,11	2SC2404-CD	Transistor
Q12	2SA1022-CD	Transistor
Q13	2SD601-QR	Transistor
Q14-17	2SC2404-CD	Transistor
Q23	2SC2404-CD	Transistor
R22	YF2116272JT	Carbon 2.7K ohms 1/16W
R23	YF2116123JT	Carbon 12K ohms 1/16W
R24	YF2116102GT	Carbon 1K ohms 1/16W
R25	YF2116112JT	Carbon 1.1K ohms 1/16W
R26	YF2116102GT	Carbon 1K ohms 1/16W
R27	YF2116222GT	Carbon 2.2K ohms 1/16W
R28	YF2116333GT	Carbon 33K ohms 1/16W
R29,30	YF2116243GT	Carbon 24K ohms 1/16W
R31	YF2116682JT	Carbon 6.8K ohms 1/16W
R32	YF2116332GT	Carbon 3.3K ohms 1/16W
R35,36	YF2116202JT	Carbon 2K ohms 1/16W

SYMBOL NO.	PART NO.	DESCRIPTION
R37	YF2116272JT	Carbon 2.7K ohms 1/16W
R38	YF2116152JT	Carbon 1.5K ohms 1/16W
R39,40	YF2116331JT	Carbon 330 ohms 1/16W
R41	YF2116821GT	Carbon 820 ohms 1/16W
R42	YF2116432JT	Carbon 4.3K ohms 1/16W
R43	YF2116272JT	Carbon 2.7K ohms 1/16W
R44	YF2116162JT	Carbon 1.6K ohms 1/16W
R45	YF2116221JT	Carbon 220 ohms 1/16W
R46	YF2116103JT	Carbon 10K ohms 1/16W
R47	YF2116332JT	Carbon 3.3K ohms 1/16W
R48	YF2116102GT	Carbon 1K ohms 1/16W
R49	YF2116103JT	Carbon 10K ohms 1/16W
R50	YF2116152JT	Carbon 1.5K ohms 1/16W
R51	ER0S2CKF5601	Metal 5.6K ohms 1/8W
R52	YF2116222GT	Carbon 2.2K ohms 1/16W
R92	YF2116103JT	Carbon 10K ohms 1/16W
R93	YF2116104JT	Carbon 100K ohms 1/16W
R94,95	YF2116102GT	Carbon 1K ohms 1/16W
R96	LP161KGT57	Carbon 1K ohms
R227	ERD10TJ821	Carbon 820 ohms 1/8W
R235	ERD10TJ101	Carbon 100 ohms 1/8W
R236	ERD10TJ103	Carbon 10K ohms 1/8W
R237	ERD10TJ124	Carbon 120K ohms 1/16W for PAL
C9	YF400103FZT	Ceramic 0.01 µF
C10	YF400330CHJT	Ceramic 33 pF for NTSC
	YF400270CHJT	Ceramic 27 pF for PAL
C11	ECEA0JKS470	Electrolytic 47 µF 6.3V
C12	ECEA1CKS100	Electrolytic 10 µF 16V
C13-15	YF400103FZT	Ceramic 0.01 µF
C16	YF400104FZT	Ceramic 0.1 µF
C17	ECEA0JKS470	Electrolytic 47 µF 6.3V
C18	YF400103FZT	Ceramic 0.01 µF
C19	ECEA0JKS470	Electrolytic 47 µF 6.3V
C20	YF400180UJJT	Ceramic 18 pF for NTSC
	YF400120CHJT	Ceramic 12 pF for PAL
C29	ECEA0JKS470	Electrolytic 47 µF 6.3V
C31	YF400101CHJT	Ceramic 100 pF
C32,35	YF400104FZT	Ceramic 0.1 µF
C162	ECCF1H121JC	Ceramic 120 pF for PAL
CF2	YFSTR4045	Filter for NTSC
	YFSTR4046	Filter for PAL
CF3	YFSTR4043	Filter for NTSC
	YFSTR4044	Filter for PAL

LED BOARD

PCB2	o YFVKZAD37P1A	Printed Circuit Board Assy
D1	LN28RP	Power Indicator
D2	LN48YP	Gen-Lock Indicator
R240	ERD10TJ181	Carbon 180 ohms 1/8W
VR101	YFK111A-1KB	Variable Resistor 1K ohms
SW1	YFSSS312L2N	Slide Switch

SYMBOL NO.		PART NO.	DESCRIPTION
32 PIN CONNECTOR BOARD			
PCB3		o YFVKZAD37P2A	Printed Circuit Board Assy
CN1		YFA348949324	32 pin Connector
ACCESSORY PARTS/PACKAGING PARTS			
M32		o YFV8QA1087BN	Operating Instruction for NTSC
		o YFV8QA1088AN	Operating Instruction for WV-AD37E
		o YFV8QA1089AN	Operating Instruction for WV-AD37N
M33		VQA0120-3	Warranty Card for NTSC
M34		YWV22XPRB99K	Service Center List for NTSC
M35	△	YFV8SA0009CN	Safety Guide for NTSC
M36		YWT20X25C03	Polyethylene Bag
M40		o YFV9CA0886AN	Packaging for NTSC
		o YFV9CB0886AN	Packaging for WV-AD37E
		o YFV9CC0886AN	Packaging for WV-AD37N
CAMERA REMOTE CONTROLLER WV-CR12			
MISCELLANEOUS			
IC101		AN6541	IC
CN1		YGRM15TRD10S	10 pin Camera Connector
CN2		BNC-BRZ-1S	BNC Monitor Out Connector
CN3		YF01P0420-00	Audio Out Jack
CN4		YFD0-121N-601	EVF Connector
CN5		o EMCTMA07C07V	10 pin VTR Connector
M1		o YFV5WA0291B3	Rear Panel
M2		o YFV5WA0292A4	Bottom Blank Panel
M3		o YFV5EA0380B2	Upper Cover
M4		o YFV5EA0381B3	Side Cover
M5		o YFV2KA0149B2	Main Chassis
M6		YFV5RA0035A4	Knob A for Slied Switch
M7		YFV5RA0043A4	Knob B for VR
M8		YFV5RA0072A4	Knob C
M9		o YFV6JA0040A4	Button
M10		o YFV2CA0118A4	Hold Plate
M11		o YFV2SA0256A4	Mounting Angle
M12		o YFV2SA0257B3	Mounting Angle
M13		YFSJ-5007	Rubber Foot
M14		o YFV2JA0011A4	Bracing Strut
M15		o YFV2FA0130A4	Cushion
M16		o YFV4JA0133A4	Spring
M17		o YFV4JA0135A4	Spring
M18	△	YFV7MA0099A4	Safety Label
M19	△	YFV7MA0103A4	Shock Label for NTSC
M20	△	YFV7MA0107A4	FCC Safety Label for NTSC
M21	△	YFV7MA0113A4	Safety Label

SYMBOL NO.	PART NO.	DESCRIPTION
M22 △	o YFV7QA1086A4	Main Label for NTSC
△	o YFV7QA1087A4	Main Label for WV-CR12E
△	o YFV7QA1088A4	Main Label for WV-CR12N
M23	YFV1EA0063A4	Special Screw
M24	YFV5MA0022A4	Shoe
M25	o YFCF51703A	Knob Base
M26	o YFCF59609A	Knob Cap
M27-1	o YFV2PA0182A4	Knob Label B
M27-2	o YFV2PB0182A4	Knob Label R

CR MAIN BOARD

PCB1	o YFVKYCR12P1A	Printed Circuit Board Assy
IC1	MN4053BS	IC
IC2	MN1551CVT3S	IC
IC3	M5234FP	IC
IC4	MN1280T	IC
IC5	NJM3414M	IC
IC6	MN1754CVS2	IC
Q4	2SD601-QR	Transistor
Q5	2SA1022-C	Transistor
Q6	2SC2404-CD	Transistor
Q7-13	2SA1022-C	Transistor
Q14,15	2SC2404-CD	Transistor
Q16-18	2SD601-QR	Transistor
Q19	2SB709-Q	Transistor
Q20,21	2SD601-QR	Transistor
Q22	2SC2404-CD	Transistor
Q23-26	2SD601-QR	Transistor
Q27	2SA1022-C	Transistor
Q28	2SC2404-CD	Transistor
Q29-32	2SA1022-C	Transistor
Q33,34	2SC2404-CD	Transistor
Q35,36	2SD601-QR	Transistor
Q37-39	2SA1022-C	Transistor
Q40	2SC2404-CD	Transistor
Q41	2SD601-QR	Transistor
Q42	2SC2404-CD	Transistor
Q43	2SD601-QR	Transistor
Q44,45	2SC2404-CD	Transistor
Q46	2SD601-QR	Transistor
Q47-50	2SA1022-C	Transistor
Q51-55	2SD601-QR	Transistor
Q56	2SB709-Q	Transistor
Q57-60	2SD601-QR	Transistor
Q61	2SB709-Q	Transistor
Q62-64	2SD601-QR	Transistor
Q65	2SB709-Q	Transistor
Q66	2SD601-QR	Transistor
Q67	2SB709-Q	Transistor
Q68	2SD601-QR	Transistor
D1-3	MA151WA	Diode
D4,5	MA151K	Diode
D6	MA151WK	Diode
D7,8	MA151K	Diode
D9	MA153	Diode
D10	MA151K	Diode
D11	MA153	Diode
D12	MA151K	Diode
R1	YF2116750JT	Carbon 75 ohms 1/16W
R2	YF2116221JT	Carbon 220 ohms 1/16W
R12	YF2116123JT	Carbon 12K ohms 1/16W
R13	YF2116203JT	Carbon 20K ohms 1/16W
R14	YF2116222GT	Carbon 2.2K ohms 1/16W
R15	YF2116103JT	Carbon 10K ohms 1/16W
R16	YF2116821GT	Carbon 820 ohms 1/16W
R17	YF2116681JT	Carbon 680 ohms 1/16W
R18	YF2116220JT	Carbon 22 ohms 1/16W
R19	YF2116392JT	Carbon 3.9K ohms 1/16W
R20	YF2116332JT	Carbon 3.3K ohms 1/16W
R21	YF2116182JT	Carbon 1.8K ohms 1/16W
R22	YF2116560JT	Carbon 56 ohms 1/16W
R23	YF2116392JT	Carbon 3.9K ohms 1/16W
R24	YF2116122JT	Carbon 1.2K ohms 1/16W
R25	YF2116560JT	Carbon 56 ohms 1/16W
R26	YF2116562JT	Carbon 5.6K ohms 1/16W
R27	YF2116333GT	Carbon 33K ohms 1/16W
R28	YF2116560JT	Carbon 56 ohms 1/16W
R29	YF2116333GT	Carbon 33K ohms 1/16W
R30	YF2116560JT	Carbon 56 ohms 1/16W
R31	YF2116202JT	Carbon 2K ohms 1/16W
R32	YF2116333GT	Carbon 33K ohms 1/16W
R33	YF2116332JT	Carbon 3.3K ohms 1/16W
R34	YF2116333GT	Carbon 33K ohms 1/16W
R35	YF2116622JT	Carbon 6.2K ohms 1/16W
R36	YF2116153JT	Carbon 15K ohms 1/16W
R37	YF2116273JT	Carbon 27K ohms 1/16W
R38	YF2116433JT	Carbon 43K ohms 1/16W
R39,41	YF2116153JT	Carbon 15K ohms 1/16W
R42	YF2116153JT	Carbon 15K ohms 1/16W
R43	YF2116560JT	Carbon 56 ohms 1/16W
R44	YF2116333GT	Carbon 33K ohms 1/16W
R45	YF2116392JT	Carbon 3.9K ohms 1/16W
R46	YF2116222GT	Carbon 2.2K ohms 1/16W
R47	YF2116103JT	Carbon 10K ohms 1/16W
R48	YF2116333GT	Carbon 33K ohms 1/16W
R49	YF2116101JT	Carbon 100 ohms 1/16W
R50	YF2116680JT	Carbon 68 ohms 1/16W
R51	YF2116473GT	Carbon 47K ohms 1/16W
R52	YF2116750JT	Carbon 75 ohms 1/16W
R53	YF2116562JT	Carbon 5.6K ohms 1/16W
R54-56	YF2116103JT	Carbon 10K ohms 1/16W
R57	YF2116683JT	Carbon 68K ohms 1/16W
R58	YF2116183JT	Carbon 18K ohms 1/16W
R59	YF2116273JT	Carbon 27K ohms 1/16W
R60	YF2116563JT	Carbon 56K ohms 1/16W
R61	YF2116222GT	Carbon 2.2K ohms 1/16W
R62	YF2116751JT	Carbon 750 ohms 1/16W
R63,64	YF2116332JT	Carbon 3.3K ohms 1/16W

SYMBOL NO.	PART NO.	DESCRIPTION
R65	YF2116182JT	Carbon 1.8K ohms 1/16W
R66	YF2116561JT	Carbon 560 ohms 1/16W
R67,68	YF2116560JT	Carbon 56 ohms 1/16W
R69	YF2116392JT	Carbon 3.9K ohms 1/16W
R70	YF2116122JT	Carbon 1.2K ohms 1/16W
R71	YF2116562JT	Carbon 5.6K ohms 1/16W
R72	YF2116392JT	Carbon 3.9K ohms 1/16W
R73	YF2116222GT	Carbon 2.2K ohms 1/16W
R74	YF2116103JT	Carbon 10K ohms 1/16W
R75	YF2116101JT	Carbon 100 ohms 1/16W
R76	YF2116560JT	Carbon 56 ohms 1/16W
R77,78	YF2116750JT	Carbon 75 ohms 1/16W
R79-82	YF2116333GT	Carbon 33K ohms 1/16W
R83	YF2116750JT	Carbon 75 ohms 1/16W
R84,85	YF2116183JT	Carbon 18K ohms 1/16W
R86,87	YF2116272JT	Carbon 2.7K ohms 1/16W
R88	YF2116560JT	Carbon 56 ohms 1/16W
R89	YF2116561JT	Carbon 560 ohms 1/16W
R90	YF2116560JT	Carbon 56 ohms 1/16W
R91	YF2116682JT	Carbon 6.8K ohms 1/16W
R92	YF2116332JT	Carbon 3.3K ohms 1/16W
R93	YF2116182JT	Carbon 1.8K ohms 1/16W
R94	YF2116560JT	Carbon 56 ohms 1/16W
R95	YF2116392JT	Carbon 3.9K ohms 1/16W
R96	YF2116122JT	Carbon 1.2K ohms 1/16W
R97	YF2116560JT	Carbon 56 ohms 1/16W
R98	YF2116333GT	Carbon 33K ohms 1/16W
R99	YF2116560JT	Carbon 56 ohms 1/16W
R100	YF2116333GT	Carbon 33K ohms 1/16W
R101	YF2116560JT	Carbon 56 ohms 1/16W
R102	YF2116333GT	Carbon 33K ohms 1/16W
R103	YF2116622JT	Carbon 6.2K ohms 1/16W
R104	YF2116273JT	Carbon 27K ohms 1/16W
R105	YF2116153JT	Carbon 15K ohms 1/16W
R106	YF2116560JT	Carbon 56 ohms 1/16W
R107	YF2116473GT	Carbon 47K ohms 1/16W
R108	YF2116333GT	Carbon 33K ohms 1/16W
R109	YF2116392JT	Carbon 3.9K ohms 1/16W
R110	YF2116101JT	Carbon 100 ohms 1/16W
R111	YF2116102GT	Carbon 1K ohms 1/16W
R113	YF2116750JT	Carbon 75 ohms 1/16W
R114	YF2116273JT	Carbon 27K ohms 1/16W
R115	YF2116103JT	Carbon 10K ohms 1/16W
R116	YF2116152JT	Carbon 1.5K ohms 1/16W
R117	YF2116560JT	Carbon 56 ohms 1/16W
R118	YF2116681JT	Carbon 680 ohms 1/16W
R119	YF2116151JT	Carbon 150 ohms 1/16W
R120	YF2116471JT	Carbon 470 ohms 1/16W
R121	YF2116561JT	Carbon 560 ohms 1/16W
R122-125	YF2116332JT	Carbon 3.3K ohms 1/16W
R126	YF2116182JT	Carbon 1.8K ohms 1/16W
R127	YF2116560JT	Carbon 56 ohms 1/16W
R128	YF2116392JT	Carbon 3.9K ohms 1/16W
R129	YF2116122JT	Carbon 1.2K ohms 1/16W
R130	YF2116682JT	Carbon 6.8K ohms 1/16W

SYMBOL NO.	PART NO.	DESCRIPTION
R131	YF2116392JT	Carbon 3.9K ohms 1/16W
R132	YF2116203JT	Carbon 20K ohms 1/16W
R133	YF2116103JT	Carbon 10K ohms 1/16W
R134,135	YF2116272JT	Carbon 2.7K ohms 1/16W
R136	YF2116331JT	Carbon 330 ohms 1/16W
R137	YF2116392JT	Carbon 3.9K ohms 1/16W
R138	YF2116103JT	Carbon 10K ohms 1/16W
R139	YF2116272JT	Carbon 2.7K ohms 1/16W
R140	YF2116223JT	Carbon 22K ohms 1/16W
R141	YF2116103JT	Carbon 10K ohms 1/16W
R142	YF2116243JT	Carbon 24K ohms 1/16W
R143,144	YF2116103JT	Carbon 10K ohms 1/16W
R145	YF2116104JT	Carbon 100K ohms 1/16W
R146	YF2116221JT	Carbon 220 ohms 1/16W
R147,148	YF2116222GT	Carbon 2.2K ohms 1/16W
R149,150	YF2116203JT	Carbon 20K ohms 1/16W
R151	YF2116560JT	Carbon 56ohms 1/16W
R152	YF2116332JT	Carbon 3.3K ohms 1/16W
R153,154	YF2116102GT	Carbon 1Kohms 1/16W
R155	YF2116222GT	Carbon 2.2K ohms 1/16W
R156	YF2116152JT	Carbon 1.5K ohms 1/16W
R157,158	YF2116511JT	Carbon 510 ohms 1/16W
R159	YF2116222GT	Carbon 2.2K ohms 1/16W
R160	YF2116302JT	Carbon 3Kohms 1/16W
R161	YF2116103JT	Carbon 10K ohms 1/16W
R162	YF2116750JT	Carbon 75ohms 1/16W
R163	YF2116101JT	Carbon 100 ohms 1/16W
R164	YF2116331JT	Carbon 330 ohms 1/16W
R165	YF2116101JT	Carbon 100 ohms 1/16W
R166	YF2116562JT	Carbon 5.6K ohms 1/16W
R167	YF2116332JT	Carbon 3.3K ohms 1/16W
R168	YF2116223JT	Carbon 22K ohms 1/16W
R169	YF2116750JT	Carbon 75 ohms 1/16W
R170	YF2116101JT	Carbon 100ohms 1/16W
R171	YF2116331JT	Carbon 330ohms 1/16W
R172	YF2116101JT	Carbon 100ohms 1/16W
R173	YF2116562JT	Carbon 5.6K ohms 1/16W
R174	YF2116332JT	Carbon 3.3K ohms 1/16W
R175	YF2116223JT	Carbon 22Kohms 1/16W
R176-178	YF2116473GT	Carbon 47Kohms 1/16W
R179,180	YF2116103JT	Carbon 10Kohms 1/16W
R181-184	YF2116473GT	Carbon 47Kohms 1/16W
R185	YF2116101JT	Carbon 100ohms 1/16W
R186	YF2116472JT	Carbon 4.7K ohms 1/16W
R187,188	YF2116392JT	Carbon 3.9K ohms 1/16W
R189	YF2116512JT	Carbon 5.1K ohms 1/16W
R190	YF2116473GT	Carbon 47Kohms 1/16W
R191	YF2116242GT	Carbon 2.4K ohms 1/16W
R192	YF2116683GT	Carbon 68Kohms 1/16W
R193	YF2116333GT	Carbon 33Kohms 1/16W
R194	YF2116303GT	Carbon 30Kohms 1/16W
R195-197	YF2116103JT	Carbon 10Kohms 1/16W
R198-200	YF2116473GT	Carbon 47Kohms 1/16W
R201	YF2116103JT	Carbon 10Kohms 1/16W
R202	YF2116303JT	Carbon 30Kohms 1/16W

SYMBOL NO.	PART NO.	DESCRIPTION
R203	YF2116103JT	Carbon 10K ohms 1/16W
R204	YF21158R2JT	Carbon 8.2 ohms 1/16W
R205,206	YF2116103JT	Carbon 10K ohms 1/16W
R207	YF2116222GT	Carbon 2.2K ohms 1/16W
R208	YF2116103JT	Carbon 10K ohms 1/16W
R209	YF2116153JT	Carbon 15K ohms 1/16W
R210	YF2116363JT	Carbon 36K ohms 1/16W
R211	YF2116222GT	Carbon 2.2K ohms 1/16W
R212,213	YF2116223JT	Carbon 22K ohms 1/16W
R214	YF2116103JT	Carbon 10K ohms 1/16W
R215	YF2116473GT	Carbon 47K ohms 1/16W
R216	YF2116103JT	Carbon 10K ohms 1/16W
R217	YF2116682JT	Carbon 6.8K ohms 1/16W
R218	YF2116470JT	Carbon 47 ohms 1/16W
R219	YF2116152JT	Carbon 1.5K ohms 1/16W
R220	YF2116182JT	Carbon 1.8K ohms 1/16W
R221	YF2116222GT	Carbon 2.2K ohms 1/16W
R222,223	YF2116333GT	Carbon 33K ohms 1/16W
R224	YF2116103JT	Carbon 10K ohms 1/16W
R225,226	YF2116223JT	Carbon 22K ohms 1/16W
R227	YF2116683JT	Carbon 68K ohms 1/16W
R228	YF2116473GT	Carbon 47K ohms 1/16W
R229	YF2116222GT	Carbon 2.2K ohms 1/16W
R300	YF2116104JT	Carbon 100K ohms 1/16W
VR1	YFH0521A1K	Variable Resistor 1K ohms
Z1	YFRKM8LFW154	Block Resistor
C4	ECEA0JKS470	Electrolytic 47 µF 6.3V
C5	ECEA0JKS101	Electrolytic 100µF 6.3V
C6	YF400390CHJT	Ceramic 39 pF
C7,8	YF400820CHJT	Ceramic 82 pF
C9	YF400680CHJT	Ceramic 68 pF
C10	YF400560CHJT	Ceramic 56 pF
C11	YF400270CHJT	Ceramic 27 pF
C12	YF400390CHJT	Ceramic 39 pF
C13	YF400820CHJT	Ceramic 82 pF
C14	YF400150CHJT	Ceramic 15 pF
C15	ECEA1AKS470	Electrolytic 47 µF 10V
C16	ECEA1CKS100	Electrolytic 10 µF 16V
C17	ECEA0JU102	Electrolytic 1000 µF 6.3V
C18	ECEA1HKS010	Electrolytic 1 µF 50V
C19	ECEA1AKS470	Electrolytic 47 µF 10V
C20	ECEA0JKS101	Electrolytic 100µF 6.3V
C21	ECEA1CKS100	Electrolytic 10 µF 16V
C22,23	ECEA1AKS470	Electrolytic 47 µF 10V
C24	ECEA0JU102	Electrolytic 1000 µF 6.3V
C25	ECEA1AKS470	Electrolytic 47 µF 10V
C26	ECEA0JKS101	Electrolytic 100µF 6.3V
C27	YF400560CHJT	Ceramic 56 pF
C28	YF400820CHJT	Ceramic 82 pF
C29	YF400151CHJT	Ceramic 150 pF
C30	YF400121CHJT	Ceramic 120 pF
C31	YF400560CHJT	Ceramic 56 pF
C32	YF400330CHJT	Ceramic 33 pF
C33-35	ECEA1AKS470	Electrolytic 47 µF 10V

SYMBOL NO.	PART NO.	DESCRIPTION
C36	YF400101CHJT	Ceramic 100 pF
C37	YF400681XKT	Ceramic 680µF 50V
C38	YF400471CHJT	Ceramic 470 pF
C39	YF400271CHJT	Ceramic 270 pF
C40	ECEA1CKS100	Electrolytic 10 µF 16V
C41	ECEA0JKS101	Electrolytic 100µF 6.3V
C42	ECEA1CKS100	Electrolytic 10 µF 16V
C43	YF400151CHJT	Ceramic 150 pF
C44	ECEA1AKK100	Electrolytic 10 µF 10V
C46	ECEA1AKS470	Electrolytic 47 µF 10V
C47	ECEA1ASS101	Electrolytic 100µF 10V
C48,49	ECEA1AKS470	Electrolytic 47 µF 10V
C50	ECSF1AE476	Tantalum 47 µF 10V
C51	ECEA1AKS470	Electrolytic 47 µF 10V
C52	ECEA1AFS470	Electrolytic 47 µF 10V
C53	ECEA1AFS221	Electrolytic 220 µF 10V
C54,55	ECEA1AKS470	Electrolytic 47 µF 10V
C56	YF400121CHJT	Ceramic 120 pF
C57	YF400390CHJT	Ceramic 39 pF
C58	ECSF1AE476	Tantalum 47 µF 10V
C59	ECEA1AKS470	Electrolytic 47 µF 10V
C60	ECEA1HKS010	Electrolytic 1 µF 50V
C61	YF426224FZS	Ceramic 0.22 µF 50V
C62	ECQV1H474JZ	Plastic 0.47 µF 50V
C63	YF400104FZT	Ceramic 0.1 µF
C70	ECEA0JKK100	Electrolytic 10 µF 6.3V
CT1	ECRHA040E11	Trimmer Capacitor 40 pF
L1-3	EL05SI8R2K	Coil 8.2µH
L4	EL05SI101K	Coil 100 µH
L5	EL05SI8R2K	Coil 8.2µH
SW1	YFSSS222A	Slide Switch
X1	YFEF0-FC4004	Oscillator
X2	YFKF38G	Crystal Oscillator
X3	EF0-FC8004	Crystal Oscillator
F1,2 ⚠	YFSP510NM0	Current Fuse 1A
J1	YF21160R00T	Jamper Resistor
CN1-JM	EMCS0550Z	5 pin Jack Male
CN2-JM	EMCS0250Z	2 pin Jack Male
CN3-JM	EMCS0850Z	8 pin Jack Male
CN4-JM	EMCS1150Z	11 pin Jack Male
CN5-JM	EMCS1050Z	10 pin Jack Male
CN6-JM	EMCS0350Z	3 pin Jack Male
CN7-JM	EMCS0750Z	7 pin Jack Male
CN8-JM	EMCS0250Z	2 pin Jack Male
CN9-JM	EMCS1050Z	10 pin Jack Male

SWITCH BOARD

PCB2	o YFVKZCR12P2A	Printed Circuit Board
SW1	YFSBU1024L10	Rotary Switch

SYMBOL NO.	PART NO.	DESCRIPTION
CONTROL BOARD		
PCB3	o YFVKZCR12P3A	Printed Circuit Board Assy
D1-23	MA165	Diode
D24	LN29RD	LED
R1	ERD10TJ302	Carbon 3K ohms 1/8W
R2	ERD10TJ221	Carbon 220 ohms 1/8W
VR1-3	YFK111A-10KB	Variable Resistor 10K ohms
C1-10	ECQM1H393KZ	Plastic 0.039 µF 50V
SW1-8	KEF10905	Push Switch
SW9,10	YFKEG10905	Push Switch
SW11-14	KEG10902	Push Switch
SW15-22	YFSSS312L4	Slide Switch
SW23	YFSSS323L2	Slide Switch
CR SUB BOARD		
PCB4	o YFVKYCR12P4A	Printed Circuit Board Assy
IC1	YFMN4538BS	IC
Q1,2	2SD601-QR	Transistor
D1-3	MA151K	Diode
D4	MA165	Diode
R1	YF2116203JT	Carbon 20K ohms 1/16W
R2	YF2116103JT	Carbon 10K ohms 1/16W
R3	YF2116683JT	Carbon 68K ohms 1/16W
R4	YF2116333GT	Carbon 33K ohms 1/16W
R5	YF2116223JT	Carbon 22K ohms 1/16W
R6	YF2116102GT	Carbon 1K ohms 1/16W
R7	YF2116222GT	Carbon 2.2K ohms 1/16W
R8	YF2116333GT	Carbon 33K ohms 1/16W
C1	ECEA1HKS010	Electrolytic 1 µF 50V
C2	ECEA1CKS100	Electrolytic 10 µF 16V
C3	ECEA1VKS3R3	Electrolytic 3.3 µF 35V
ACCESSORY PARTS/PACKAGING PARTS		
CN10	o YFEO-111J-601	Control Cable
M31	o YFV8QA1051AN	Operating Instruction for NTSC
	o YFV8QA1052AN	Operating Instruction for WV-CR12E
	o YFV8QA1053AN	Operating Instruction for WV-CR12N
M32	VQA0120-3	Warranty Card
M33	YWV22XPRB99K	Service Center List
M34 ⚠	YFV8SA0009CN	Safety Card
M35	XZB26X40C05	Bag
M36	YWT050803	Bag
M37	YWT10X35C03	Bag
M40	o YFV9CA0854AN	Packaging for NTSC
	o YFV9CB0854AN	Packaging for WV-CR12E
	o YFV9CC0854AN	Packaging for WV-CR12N

SYMBOL NO.	PART NO.	DESCRIPTION
PAN/TILT HEAD WV-PH10		
MISCELLANEOUS		
D101	10D1	Diode
C101,102	ECKF1H104KB	Ceramic 0.1 µF 50V
MO1	o YF140B-020	Tilt Motor Unit
MO2	o YF140C-240	Pan Motor Unit
SW3,4	o YFD2MS	Micro Switch
SW5	o YFJ-S5088	Slied Switch
CN1	o YF140C-273	Connector Cable Assy
CN2	o YFHEC-0738	DC Jack
CN10	o YF140C-275	DC Jack Cable Assy
M1	o YF140C-142	Main Base
M2	o YF140C-140U	Side Plate
M3	o YF140C-141	Pan Main Shaft Base Assy
M4	o YF140B-021	Pan Support Base Assy
M5	o YF140C-229U	Pan Motor Gear
M6	o YF140B-022	Pan Srip Plate Assy
M7	o YF140C-228U	Bearing A
M8	o YF140C-227U	Bearing B
M9	o YF140C-231U	Spring Liner
M10	o YF140C-230	T Cam
M12	o YF140C-233	Flange(X2)
M15	o YF140C-234	Stopper
M16	o YF140B-017	Out Gear Unit
M17	o YF140C-248	Ball Bearing
M18	o YF140C-235	Pan Motor Base
M19	o YF140C-232	Housing
M22	o YF140C-264	Mounting Plate for DC Jack
M24 ⚠	o YFV7QA1094A4	Main Label for NTSC
⚠	o YFV7QA1095A4	Main Label for WV-PH10E
⚠	o YFV7QA1096A4	Main Label for WV-PH10N
M25	o YF140C-190A	Cover
M26	o YF140C-191E	Side Cover A for NTSC,WV-PH10E
	o YF140C-191D	Side Cover A for WV-PH10N
M27	o YF140C-192B	Side Cover B for NTSC,WV-PH10E
	o YF140C-192A	Side Cover B for WV-PH10N
M28	o YF140C-106	Camera Stand
M29	o YF140C-107	Camera Stand Rubber
M30	o YF506C-001AU	Camera Mounting Screws
M31	o YF140C-197AU	Insulater Paper
M32	o YF140C-105U	Decoration Plate
M33	o YF140C-198	Cushion Rubber
M34	o YF134C-009A	Shoe
M35	o YF128C-010	Spring Plate for Shoe
M36	o YF128C-005	Stopper Screw for Shoe
M37	o YF140C-206	Cord Bushing A
M40	o YF140C-202	Battery Holder Snap
M41	o YF140C-208AU	Insulater Plate for Battery
M42	o YF140C-218	Mounting Bracket for Battery Cover
M43	o YFV7SA0318B4	Battery Box Seal
M44	o YF140C-200	Stopper Screw
M45	o YF140C-193A	Battery Holder Cover A

SYMBOL NO.	PART NO.	DESCRIPTION
M46	o YF140C-194A	Battery Holder Cover B
M47	o YF140C-290	Cord Bushing B
M48	o YF128C-003B	Mounting Base
M49	o YF140C-201	Battery Holder

CONTROL BOARD

PCB1	o YF140C-018U	Printed Circuit Board Assy	
IC1,2	o TA75339P	IC	
IC3,4	o TA7354	IC	
Q1,2	2SB1015 or	Transistor	
	2SA490	Transistor	
Q3,4	2SC1815	Transistor	
D1-6	IS1588	Diode	
D7	05Z3.6	Zenner Diode	
D8	10D1	Diode	
R1	ERD25FJ183	Carbon	18K ohms 1/4W
R2,3	ERD25FJ333	Carbon	33K ohms 1/4W
R4	ERD25FJ183	Carbon	18K ohms 1/4W
R5,6	ERD25FJ104	Carbon	100K ohms 1/4W
R7-14	ERD25FJ272	Carbon	2.7K ohms 1/4W
R15,16	ERD25FJ680	Carbon	68 ohms 1/4W
R17,18	ERD25FJ5R1	Carbon	5.1 ohms 1/4W
R19,20	ERD25FJ331	Carbon	330 ohms 1/4W
R21,22	ERD25FJ472	Carbon	4.7K ohms 1/4W
R23,24	ERD25FJ331	Carbon	330 ohms 1/4W
R25,26	ERD25FJ272	Carbon	2.7K ohms 1/4W
R27	ERD25FJ472	Carbon	4.7K ohms 1/4W
VR1,2	o YFSR19-2.2K	Variable Rasistor	2.2K ohms
C1-3	ECKF1H153KB	Ceramic	0.015 µF 50V
C4	ECEA1CK470S	Electrolytic	47 µF 16V
C5-8	ECKF1H223KB	Ceramic	0.022 µF 50V
C9,10	ECKF1H223KB	Ceramic	0.022 µF 50V
C11,12	ECEA1CK010S	Electrolytic	1 µF 16V
C13	ECEA1CK101S	Electrolytic	100 µF 16V
CN1-JM	o YF305815000	5 pin Jack Male	
CN2-JM	o YF302815000	2 pin Jack Male	
CN3-JM	o YF304815002	4 pin Jack Male	
CN4-JM	o YF304815000	4 pin Jack Male	

SWITCH BOARD

PCB2	o YF140B-016AU	Printed Circuit Board Assy
SW1,2	o YFS-5GL13	Micro Switch

SYMBOL NO.	PART NO.	DESCRIPTION

ACCESSORY PARTS/PACKAGING PARTS

M61	o YFV8QA1058AN	Operating Instruction for NTSC
	o YFV8QA1059AN	Operating Instruction for WV-PH10E
	o YFV8QA1060AN	Operating Instruction for WV-PH10N
M62	VQA0120-3	Warranty Card for NTSC
M63	YWV22XPRB99K	Service Center List for NTSC
M64 ⚠	YFV8SA0009CN	Safety Card for NTSC
M65	YWT15X25C03	Polyethylene Bag for Power Cord
M66	YWT23X30C03	Polyethylene Bag for Printed
M67	YWT23X34C03	Polyethylene Bag for Pan/Tilt Head
M69	o YFV9CA0861AN	Packaging for NTSC
	o YFV9CA0862AN	Packaging for WV-PH10E
	o YFV9CA0872AN	Packaging for WV-PH10N
M70	YWS-RB032	Packing Label

MOUNTING BRACKET WV-Q39

MISCELLANEOUS

CN101	o YFE0111J602	10 pin Connector Cable Assy
CN102	o YFDD8110N610	8 pin Connector
M1	o YFDVQ392201	Adaptor Base for Left Side
M2	o YFDVQ392202	Adaptor Base for Right Side
M3	o YFDVQ392403A	Reinforcement Plate
M4	o YFDVQ394401	Protection Sheet
M5	o YFDVQ393401	Stipper Screws
M6	o YFDVQ392404	Ander Plate for Adaptor
M7	YWV421-EM01U	Control Screws for Camera
M8	o YFDVQ392305	Junction Box
M9	YWSR-5P-4	Cord Bushing
M10	o YFV7QA1097A4	Main Label for NTSC
	o YFV7QA1098A4	Main Label for PAL

BUFFER BOARD

PCB1	o YFVKZ0Q39P1A	Printed Circuit BoardAssy	
IC1	AN78L05	IC	
Q1-4	2SD636-Q	Transistor	
R1	ERD10TJ222	Carbon	2.2K ohms 1/8W
R2	ERD10TJ103	Carbon	10K ohms 1/8W
R3	ERD10TJ274	Carbon	270K ohms 1/8W
R4	ERD10TJ562	Carbon	5.6K ohms 1/8W
R5	ERD10TJ103	Carbon	10K ohms 1/8W
R6	ERD10TJ272	Carbon	2.7K ohms 1/8W
R7	ERD10TJ822	Carbon	8.2K ohms 1/8W

SYMBOL NO.	PART NO.	DESCRIPTION
R8	ERD10TJ224	Carbon 220K ohms 1/8W
R9	ERD10TJ392	Carbon 3.9K ohms 1/8W
R10	ERD10TJ750	Carbon 75 ohms 1/8W
C1	ECEA1AU221	Electrolytic 220 µF 6.3V
C2,3	ECEA0JKK100	Electrolytic 10 µF 6.3V
CN1,2	EMCS0650Z	6 pin Jack Male

ACCESSORY PARTS/PACKAGING PARTS

M15	o YFV8QA1064AN	Operating Instruction for NTSC
	o YFV8QA1065AN	Operating Instruction for PAL
M16	VQA0120-3	Warranty Card
M17	YWV22XPRB99K	Service Center List
M18	YFV8SA0009CN	Safety Card
M19	YWT20X25C03	Polyethylene Bag for Printed
M20	YWT30X40C05	Polyethylene Bag for Mounting Bracket
M21	o YFV9CA0865AN	Packaging for NTSC
	o YFV9CA0866AN	Packaging for PAL
M22	YWS-RB032	Packing Label

STUDIO ZOOM LENS WV-LZ15/12

MISCELLANEOUS

SW1	o YF401614	Iris Switch
CN1	o YF401610	20 pin Connector Cable Assy
M1	YF401447	Hood Cap
M2	YF401611	Hood
M3	o YF401608	Focus Band
M4	o YF121688	Macro Button
M5	o YF616129	Zoom Lever
M6	o YF616139	Coil Spring for Macro Button
M7	o YF401613	Lens Assy
M8	o YF401602	Iris Cover
M9	o YFV7QA1126A4	Main Label

SYMBOL NO.	PART NO.	DESCRIPTION

ACCESSORY PARTS/PACKAGING PARTS

M11	o YFV8QA1042AN	Operating Instruction
M12	VQA0120-3	Warranty Card
M13	YWS-EULRB01E	Sarvice Centor List
M14	YWT20X20C03	Polyethylene Bag
M16	o YFV9CA0849AN	Packaging

10P-14P CONVERSION CABLE WV-CA11

CN1	o SRCB6A16-14P	14 pin Connector
CN2	o RM15TJ-10S	10 pin Connector

EXPLODED VIEW OF RCU

○ Numbers show screws.

No.	Screws	Description
①	XSB26 + 6FX	Binding Head Screws
②	XSB3 + 4FX	Binding Head Screws
③	XSB3 + 6FX	Binding Head Screws
④	XSB4 + 6FX	Binding Head Screws
⑤	XSB26 + 6FXK	Binding Head Black Screws
⑥	XSB3 + 6FXK	Binding Head Black Screws
⑦	XSN26 + 6FXN	Pan Head Machine Screws
⑧	XSN3 + 8FXN	Pan Head Machine Screws
⑨	XSN3 + B10FXK	Machine Screw and Washer A'ssy
⑩	XWC4BFN	External Toothed Lock Washer
⑪	XWE3FX	Small Round Plain Washer
⑫	XNG3E	Hexagon Heads Nuts

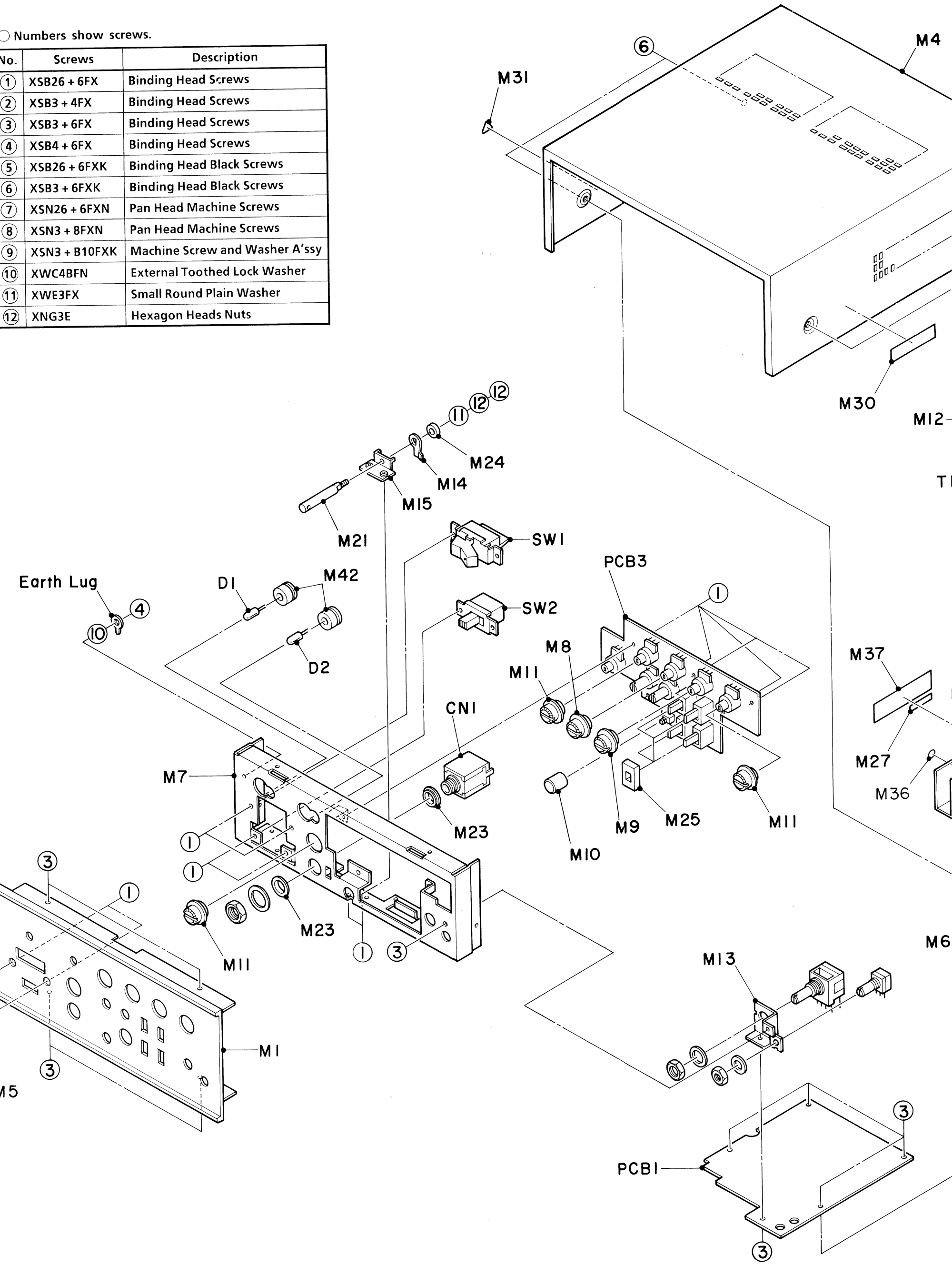

V OF RCU (WV-RC35)

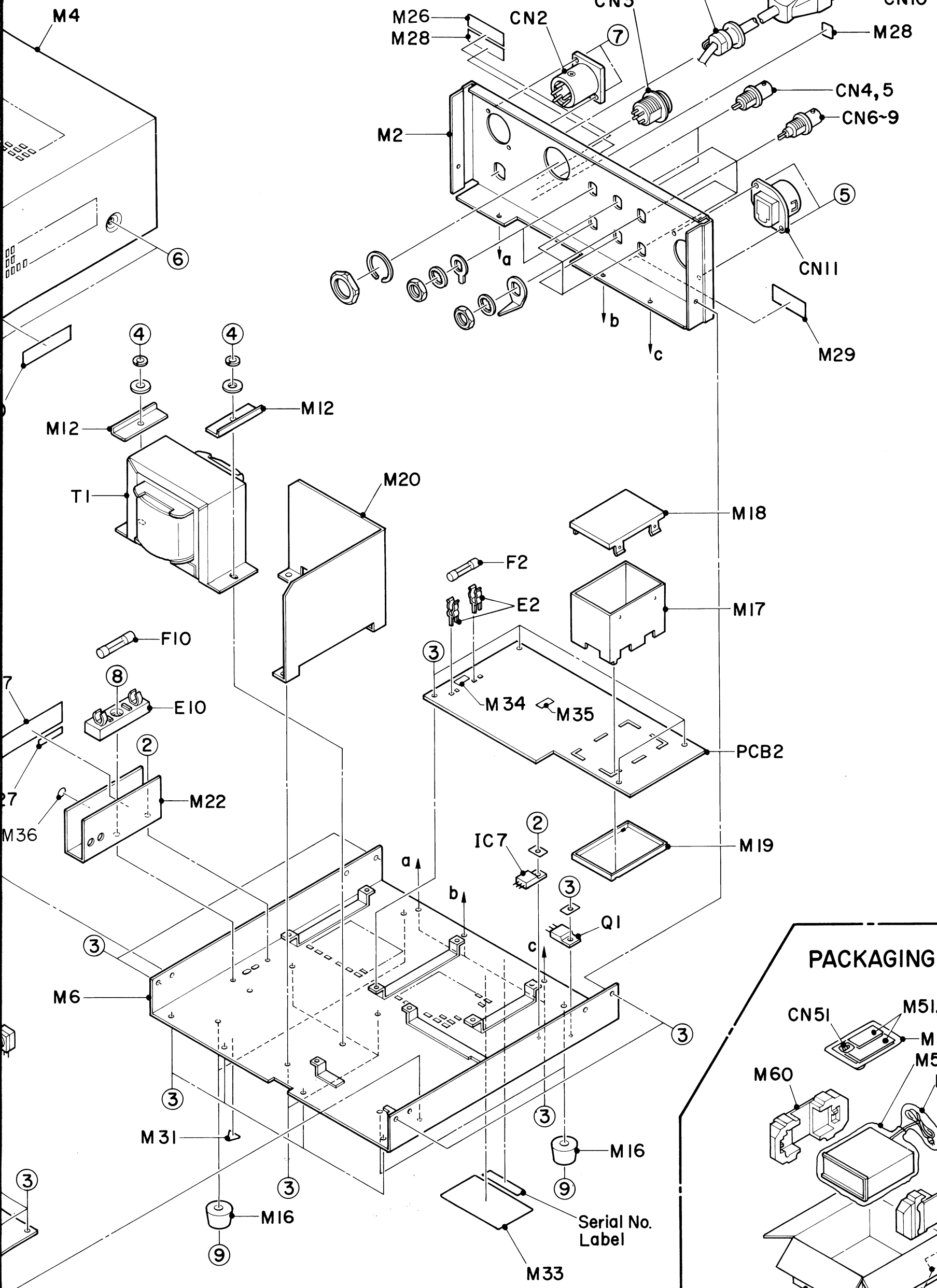

PCB1	YFVKZRC35P1A
	YFVKZRC35E1A
PCB2	YFVKZRC35P2A
	YFVKZRC35E2A
PCB3	YFVKZRC35P3A
IC7	AN6541
Q1	2SB946-PQ
D1	LN21RPH
D2	YFLN31GCP
T1	YFPHB66V042
SW1	EST1565T
SW2	ESD391T
F10	XBA1F20NU100
CN1	YWU194-1-1
CN2	XLR-32F512
CN3	YFCNR-1204J
CN4,5	YFBNC-BRZ-1
CN6-9	YFRBS-11
CN10	YWKP30SVT200
	YWHBS-3-08
	YWC0309-08F
	YWVM0309-08
	YWKPGTSA-3
CN11	YFRC35-J12
E10	YWXN1157-03
M1	YFV5WA0286A3
	YFV5WB0286A3
M2	YFV5WA0287A3
	YFV5WB0287A3
M4	YFV5EA0387A2
M5	YFV5DA0005A4
M6	YFV2KA0147B2
M7	YFV2KA0148B3
M8	YFV5RB0004A4
M9	YFV5RC0004A4
M10	YFV6JA0036B4
M11	YWV3801HR01
M12	YFV2CA0117A4
M13	YFV2SA0254A4
M14	YWJ500PAM01
M15	YWJ500PAM02B
M16	YWLSR-10
M17	YFV2HA0399A4
M18	YFV2HA0400A4
M19	YFV2HA0401A4
M20	YFV2HA0402A3
M21	YFV4HA0011A4
M22	YFV2PA0167A4
M23	YWA620AER01
M24	YWJ500PWB01A
M25	YFV3AA0014A4
M26	YFV7MA0081A4
M27	YFV7MA0180A4
	YFV7MA0209A4
M28	YFV7MA0197A4
	YFV7MA0015A4
M29	YFV7MA0231A4
M30	YFV7MB0099A4
	YFV7MB0104A4
M31	YFV7MB0103A4
M33	YFV7QA1079B4
	YFV7QA1080B4
	YFV7QA1081B4
	YFV7QA1082B4
	YFV7QA1083B4
	YFV7QA1084B4
	YFV7QA1085B4
M34	YFV7MA0207A4
M35	YFV7MA0219A4
M36	YW-BCG-UR01B
M37	YWS-CULRB03
	YWS-CCSRB01
M40	YWSR5N4
M41	YWSR6N3-4
	YWSR6W-1
M42	YWJ800PWB01

PACKAGING

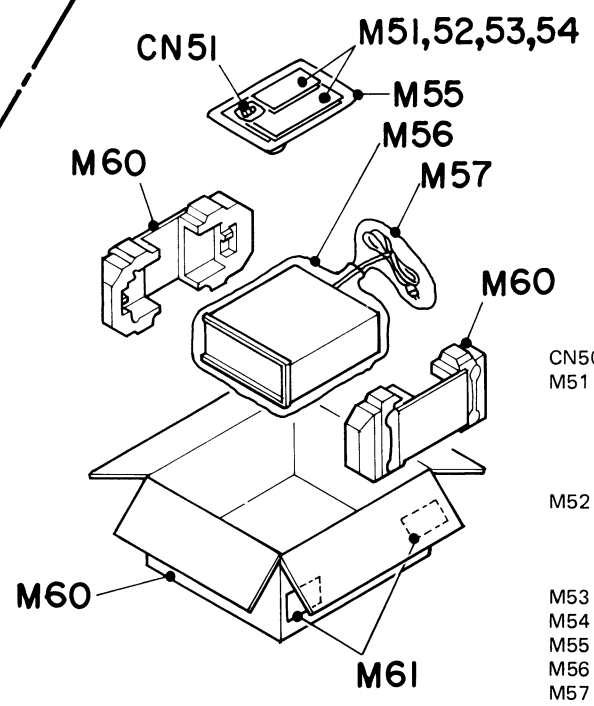

CN50	YFCNR-1204P
M51	YFV8QA1045AN
	YFV8QA1046AN
	YFV8QA1047AN
	YFV8QA1050AN
	YFV8QA1090AN
M52	VQA0120-3
	VQA0054-5
	19998700419
	YFV8UA0004A4
M53	YWV22XPRB99K
M54	YFV8SA0009CN
M55	XZB26X40C05
M56	XZB35X50C05
M57	YWT20X35C03
M60	YFV9CA0852AN
	YFV9CA0903AN
	YFV9CA0904AN
M61	YWS-RB032

EXPLODED VIEW OF PAN/T

PCB1	YF140C-018U
PCB2	YFV140B-016AU
D101	10D1
C101,102	ECKF1H104KB
MO1	YF140B-020
MO2	YF140C-240
SW3,4	YFD2MS
SW5	YFJ-S5088
CN1	YF140C-273
CN2	YFHEC-0738
CN10	YF140C-275
M1	YF140C-142
M2	YF140C-140U
M3	YF140C-141
M4	YF140B-021
M5	YF140C-229U
M6	YF140B-022
M7	YF140C-228U
M8	YF140C-227U
M9	YF140C-231U
M10	YF140C-230
M12	YF140C-233
M15	YF140C-234
M16	YF140B-017
M17	YF140C-248
M18	YF140C-235
M19	YF140C-232
M22	YF140C-264
M24	YFV7QA1094A4 YFV7QA1095A4 YFV7QA1096A4
M25	YF140C-190A
M26	YF140C-191E YF140C-191D
M27	YF140C-192B YF140C-192A
M28	YF140C-106
M29	YF140C-107
M30	YF506C-001AU
M31	YF140C-197AU
M32	YF140C-105U
M33	YF140C-198
M34	YF134C-009A
M35	YF128C-010
M36	YF128C-005
M37	YF140C-206
M40	YF140C-202
M41	YF140C-208AU
M42	YF140C-218
M43	YFV7SA0318B4
M44	YF140C-200
M45	YF140C-193A
M46	YF140C-1934A
M47	YF140C-290
M48	YF128C-003B
M49	YF140C-201

○ Numbers show screws.

No.	Screws	Description
①	XSB3 + 5FX	Binding Head Screws
②	XSB3 + 6FX	Binding Head Screws
③	XSB3 + 10FXF	Binding Head Screws
④	XSS3 + 8FX	Flush Head Machine Screws
⑤	XSS2 + 5FX	Flush Head Machine Screws
⑥	XTN26 + 8FX	Pan Head Machine Tapping Screws
⑦	XTS2 + 6FX	Flush Head Machine Tapping Screws
⑧	XSN2 + 5FX	Pan Head Machine Screws
⑨	XSN26 + 4FX	Pan Head Machine Screws
⑩	XSN3 + 6FX	Pan Head Machine Screws
⑪	XSN4 + 12FX	Pan Head Machine Screws
⑫	XTN3 + 8FX	Pan Head Machine Tapping Screws
⑬	XTN2 + 10FX	Pan Head Machine Tapping Screws
⑭	XSB3 + 5FXK	Binding Head Black Screws
⑮	YFS-AS-4-6CP	Hexagon Socket Set Screws
⑯	XVG3AFN	Hexagon Head Bolts
⑰	XUC4FX	Retaining Ring type E
⑱	YF140C-249	Plain Washer
⑲	YF140C-250	Plain Washer

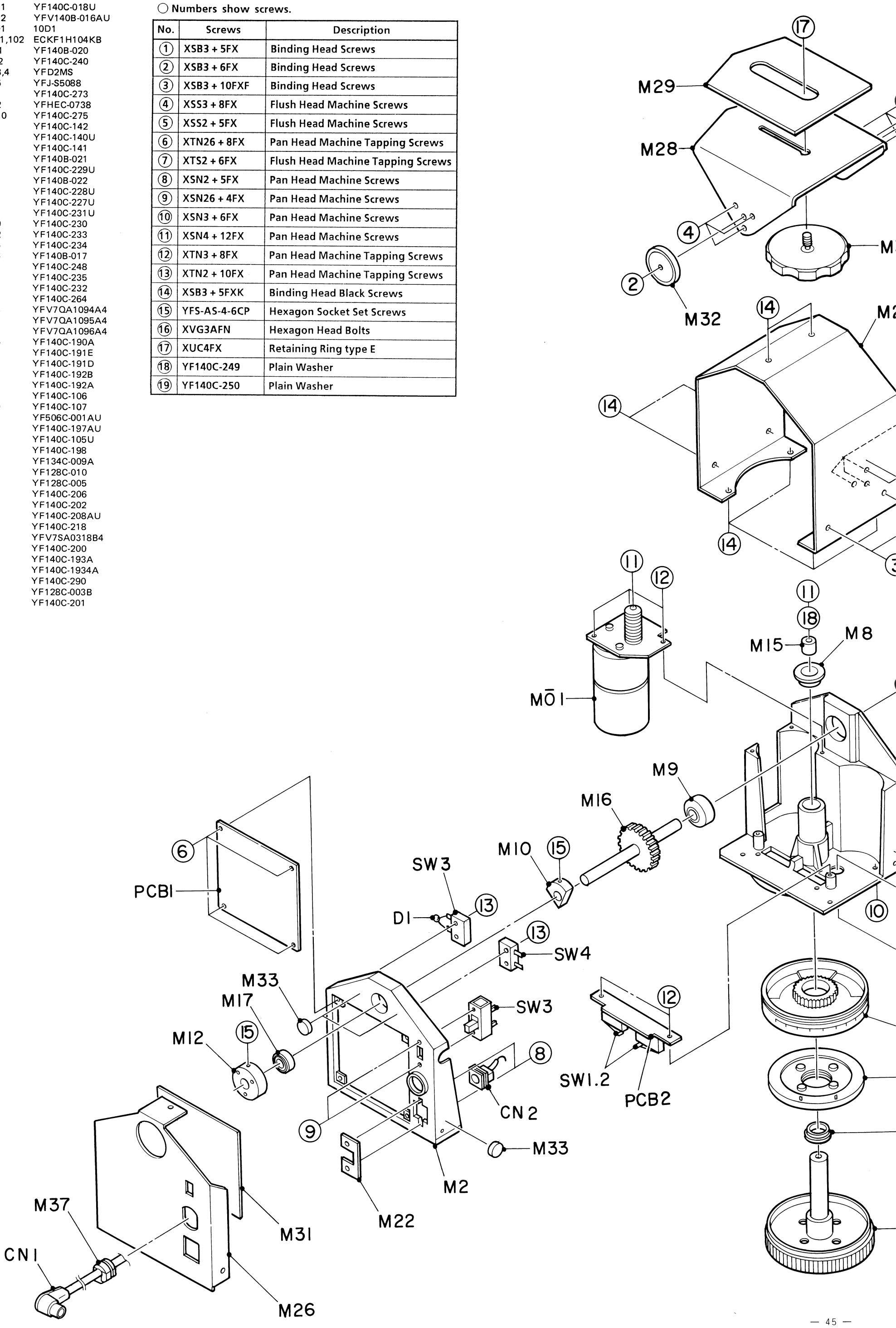

F PAN/TILT HEAD (WV-PH10)

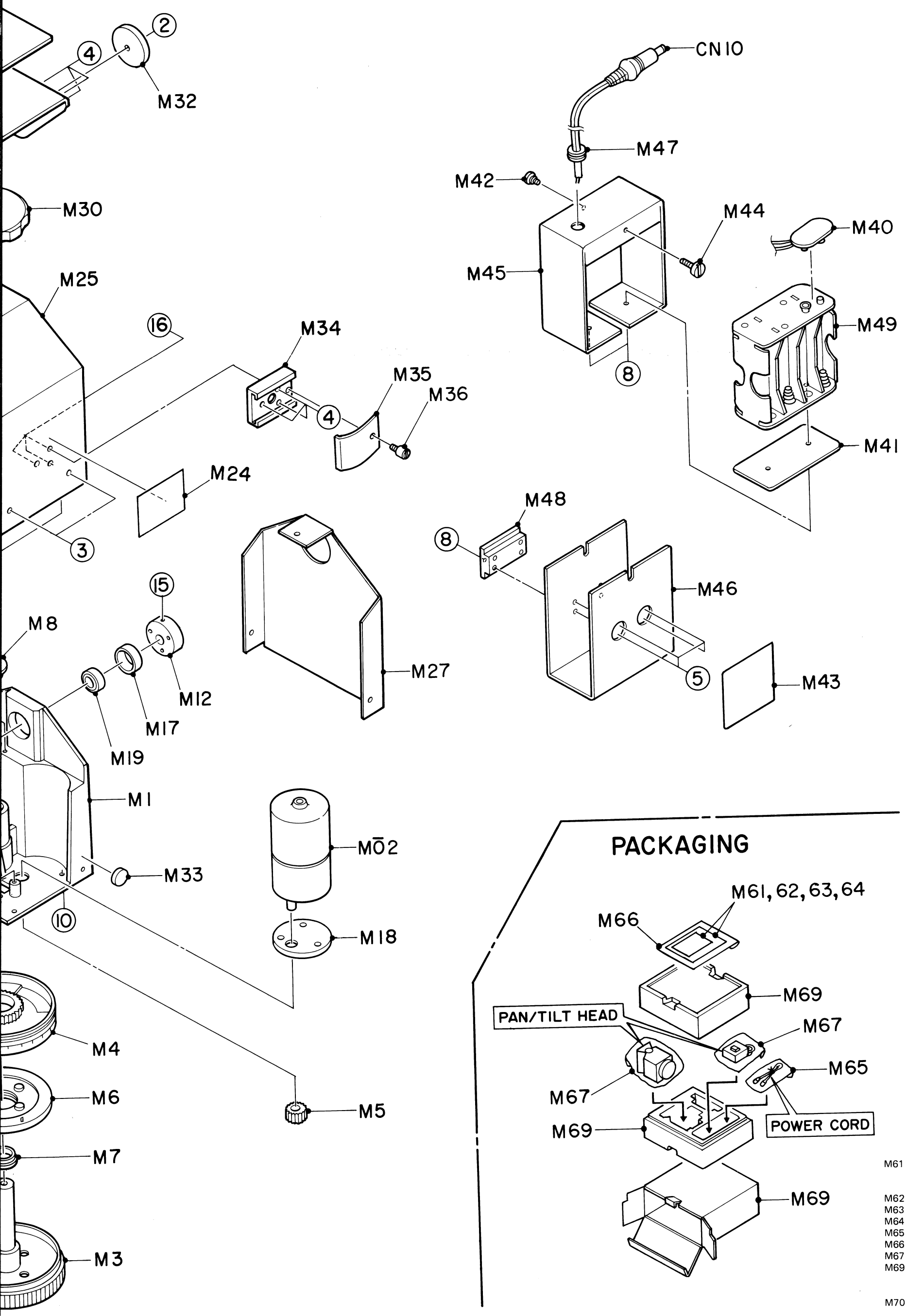

PACKAGING

M61	YFV8QA1058AN
	YFV8QA1059AN
	YFV8QA1060AN
M62	VQA0120-3
M63	YWV22XPRB99K
M64	YFV8SA0009CN
M65	YWT15X25C03
M66	YWT23X30C03
M67	YWT23X34C03
M69	YFV9CA0861AN
	YFV9CA0862AN
	YFV9CA0872AN
M70	YWS-RB032

EXPLODED VIEW OF RCU ADAPTOR (WV-AD37)

PCB1-1	YFVKBAD37P1A
	YFVKBAD37E1A
PCB1-2	YFVKBAD37P1A
	YFVKCAD37E1A
PCB2	YFVKZAD37P1A
PCB3	YFVKZAD37P2A
Q21	2SC1398-QR
SW1	YFSSB022L6NR
CN1,2	YFBNC-BRZ-1
CN3	YWLJ194-1-1
CN4	YFAD37RCU14P
CN5	YFXLR432F512
M1	YFV5EA0379A1
M2	YFV5WA0281A4
M3	YFV5WA0279A4
M4	YFV5WA0280A4
M5	YFV7QA1075A4
	YFV7QA1102A4
	YFV7QA1103A4
M6	YFV7MA0106A4
	YFV7MA0099A4
M7	YFV7SA0169B4
M8	YFV7MA0162A4
	YFV7MA0219A4
M9	YWS-CCSRB01
M10	YFV3CA0071A4
M11	YFV2KA0145A3
M12	YFV2SA0251A4
M13	YFV5RA0048A4
M14	YFV7MA0103A4
M15	YFV5EA0383A2
M16	YFV6JA0012A4
M17	YFV2CA0114A4
M18	YFV6GA0049A4
M19	YFV6GA0050A4
M20	YFV4RA0009A4
M21	YFV4JA0084A4
M22	YFV4JA0130A4
M23	YFV4JA0131A4
M24	YFV5VA0045A4
M25	YFV2EA0045A4
M26	YFV5EA0406A4
M27	YFV2EA0046A4

◯ Numbers show screws

No.	Screw	Description
①	XSB26 + 6FX	Binding Head Screws
②	XSB26 + 8FX	Binding Head Screws
③	XSB26 + 6FXK	Binding Head Black Screws
④	XSB26 + 8FXK	Binding Head Black Screws
⑤	XSS26 + 6FXK	Flush Head Machine Black Screws
⑥	XSN26 + 6FNW	Pan Head Machine Screws
⑦	XTB26 + 8CFX	Binding Head Tapping Screws
⑧	XWG26	Polished Round Plain Washer

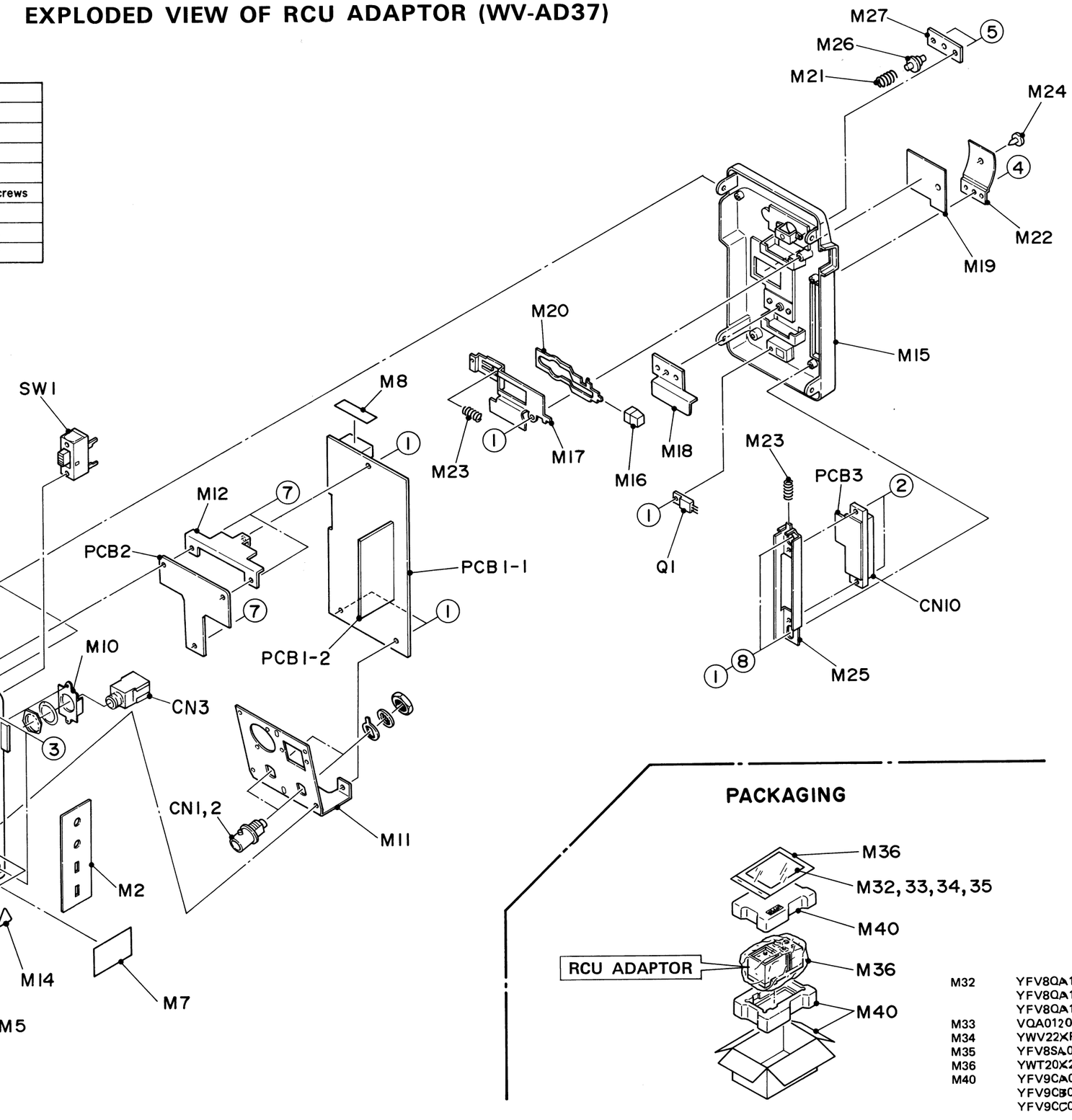

PACKAGING

M32	YFV8QA1087BN
	YFV8QA1088AN
	YFV8QA1089AN
M33	VQA0120-3
M34	YWV22XPRB99K
M35	YFV8SA0009CN
M36	YWT20X25C03
M40	YFV9CA0886AN
	YFV9CB0886AN
	YFV9CC0886AN

EXPLODED VIEW

CAMERA REMOTE CONTROLLER (WV-CR12)

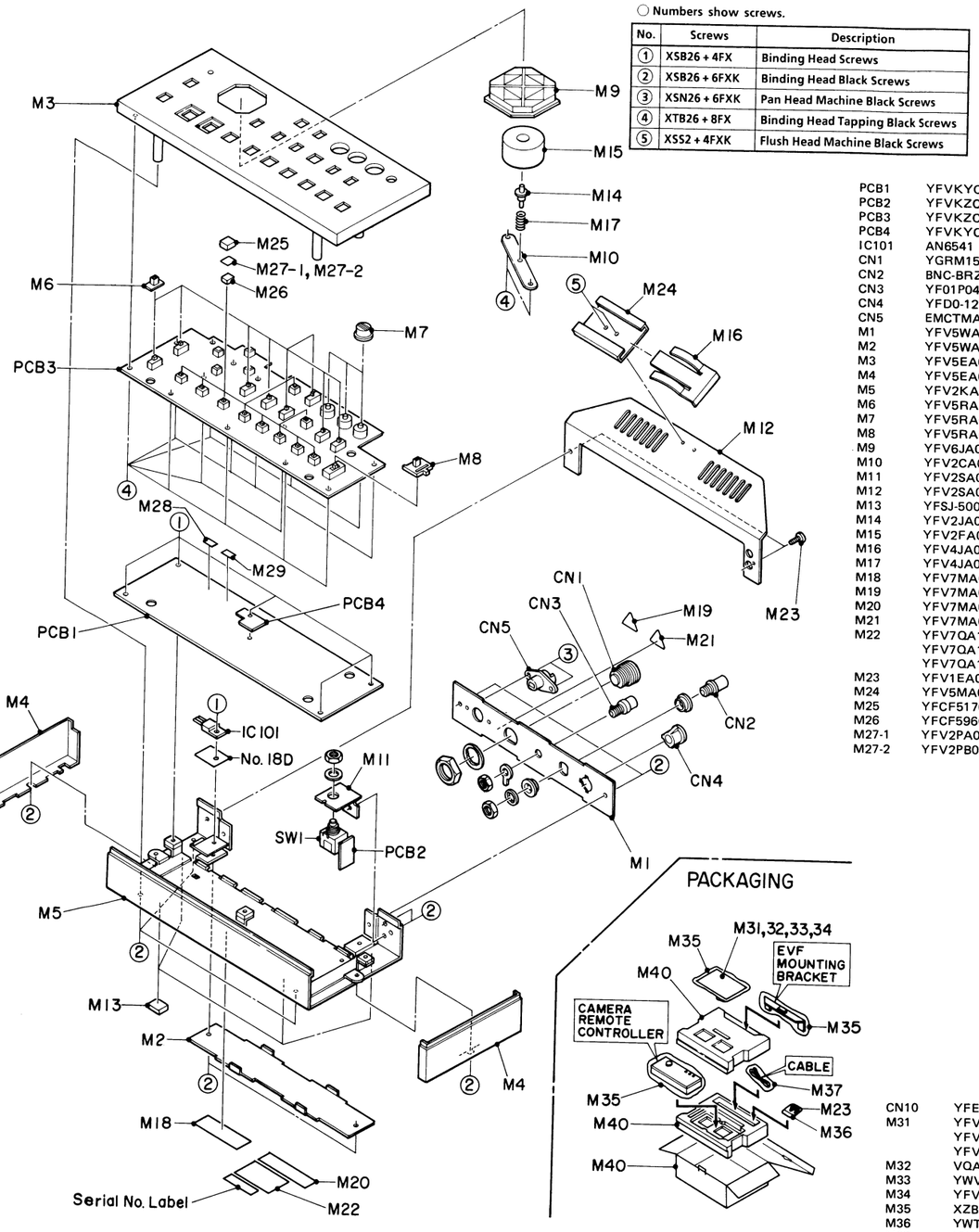

○ Numbers show screws.

No.	Screws	Description
①	XSB26 + 4FX	Binding Head Screws
②	XSB26 + 6FXK	Binding Head Black Screws
③	XSN26 + 6FXK	Pan Head Machine Black Screws
④	XTB26 + 8FX	Binding Head Tapping Black Screws
⑤	XSS2 + 4FXK	Flush Head Machine Black Screws

PCB1	YFVKYCR12P1A
PCB2	YFVKZCR12P2A
PCB3	YFVKZCR12P3A
PCB4	YFVKYCR12P4A
IC101	AN6541
CN1	YGRM15TRD10S
CN2	BNC-BRZ-1S
CN3	YF01P0420-00
CN4	YFD0-121N-601
CN5	EMCTMA07C07V
M1	YFV5WA0291B3
M2	YFV5WA0292A4
M3	YFV5EA0380B2
M4	YFV5EA0381B3
M5	YFV2KA0149B2
M6	YFV5RA0035A4
M7	YFV5RA0043A4
M8	YFV5RA0072A4
M9	YFV6JA0040A4
M10	YFV2CA0118A4
M11	YFV2SA0256A4
M12	YFV2SA0257B3
M13	YFSJ-5007
M14	YFV2JA0011A4
M15	YFV2FA0130A4
M16	YFV4JA0133A4
M17	YFV4JA0135A4
M18	YFV7MA0099A4
M19	YFV7MA0103A4
M20	YFV7MA0107A4
M21	YFV7MA0113A4
M22	YFV7QA1086A4 YFV7QA1087A4 YFV7QA1088A4
M23	YFV1EA0063A4
M24	YFV5MA0022A4
M25	YFCF51703A
M26	YFCF59609A
M27-1	YFV2PA0182A4
M27-2	YFV2PB0182A4

PACKAGING

CN10	YFEO-111J-601
M31	YFV8QA1051AN YFV8QA1052AN YFV8QA1053AN
M32	VQA0120-3
M33	YWV22XPRB99K
M34	YFV8SA0009CN
M35	XZB26X40C05
M36	YWT050803
M37	YWT10X35C03
M40	YFV9CA0854AN YFV9CB0854AN YFV9CC0854AN

MOUNTING BRACKET (WV-Q39)

○ Numbers show screws.

No.	Screws	Description
①	XSB3 + 5FXK	Binding Head Black Screws
②	XSS4 + 8FXK	Flush Head Machine Black Screws

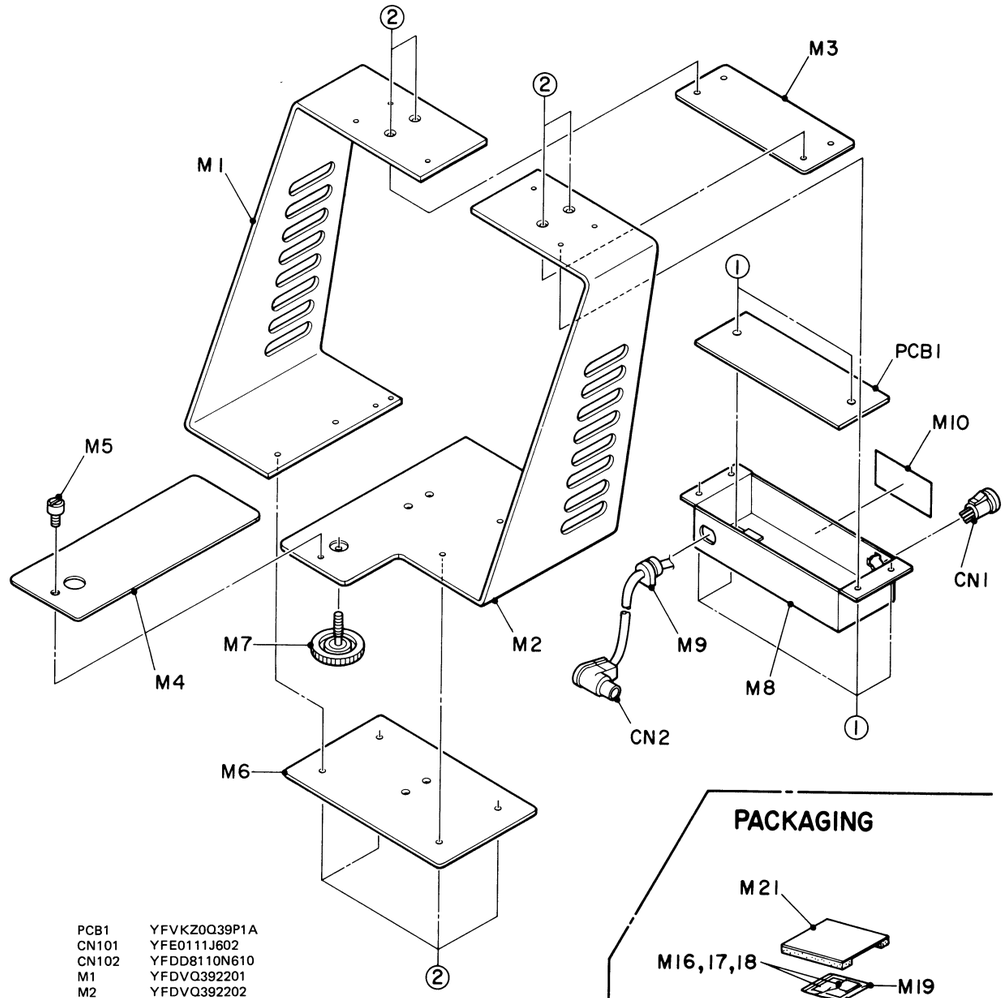

PCB1	YFVKZ0Q39P1A
CN101	YFE0111J602
CN102	YFDD8110N610
M1	YFDVQ392201
M2	YFDVQ392202
M3	YFDVQ392403A
M4	YFDVQ394401
M5	YFDVQ393401
M6	YFDVQ392404
M7	YWV421-EM01U
M8	YFDVQ392305
M9	YWSR-5P-4
M10	YFV7QA1097A4 YFV7QA1098A4

PACKAGING

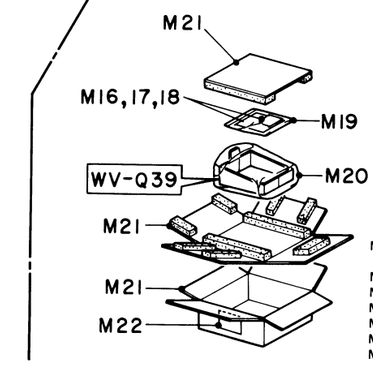

M15	YFV8QA1064AN YFV8QA1065AN
M16	VQA0120-3
M17	YWV22XPRB99K
M18	YFV8SA0009CN
M19	YWT20X25C03
M20	YWT30X40C05
M21	YFV9CA0865AN YFV9CA0866AN
M22	YWS-RB032

EXPLODED VIEW OF ZOOM LENS (WV-LZ15/12)

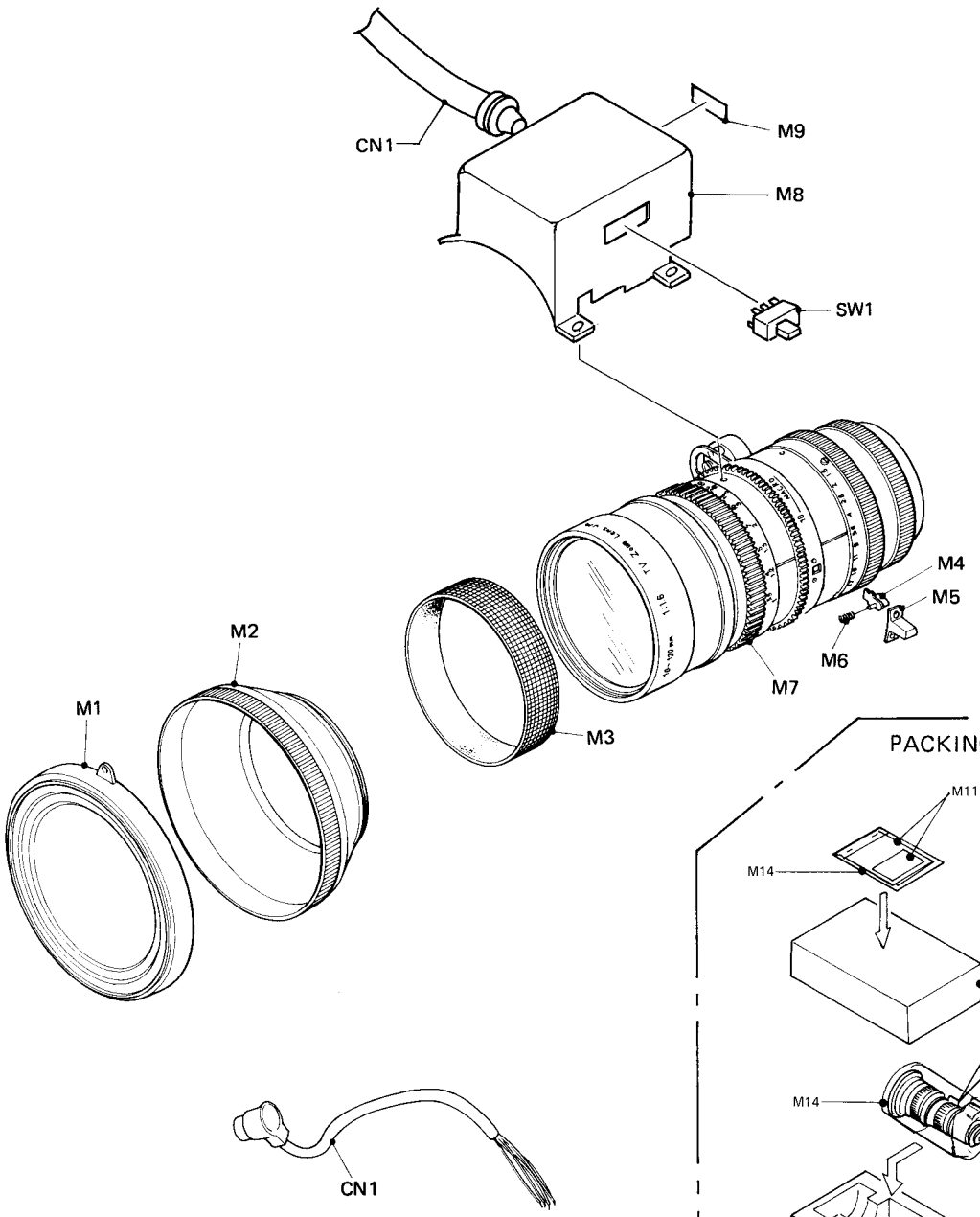

SW1	YF401614
CN1	YF401610
M1	YF401447
M2	YF401611
M3	YF401608
M4	YF121688
M5	YF616129
M6	YF616139
M7	YF401613
M8	YF401602
M9	YFV7QA1126A4

PACKING

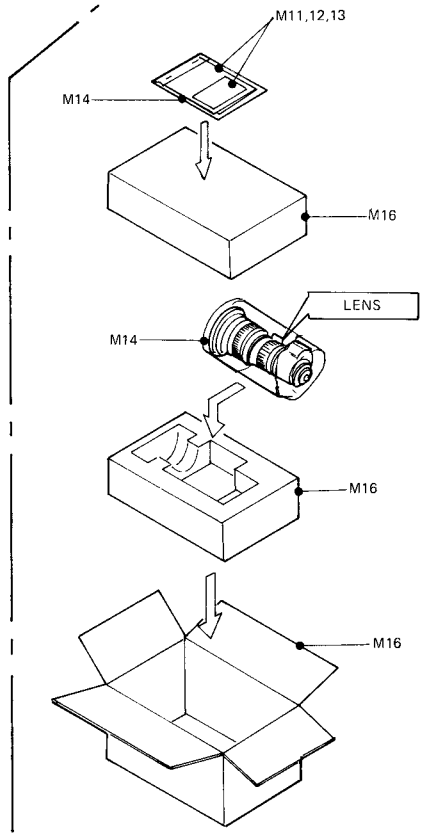

M11	YFV8QA1042AN
M12	VQA0120-3
M13	YWS-EULRB01E
M14	YWT20X20C03
M16	YFV9CA0849AN

EXPLODED VIEW OF CONVERSION CABLE (WV-CA11)

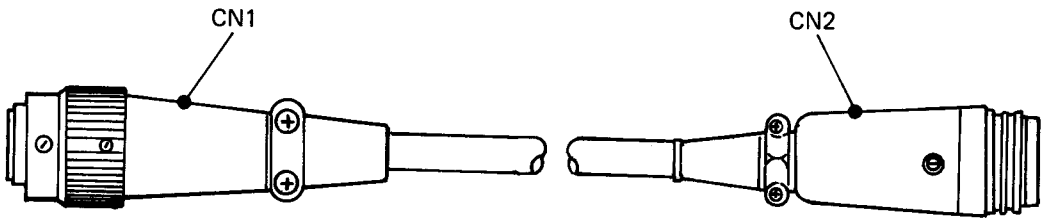

CN1	SRCB6A-16-14P
CN2	RM15TJ-10S